Catalog # :	Project :
Prepared By :	Date :

Mirada - XALM
Outdoor LED Area Light

The Mirada's sleek design makes it perfectly-suited for architectural applications, while its cost-effective die-cast aluminum housing makes its acquisition cost very competitive. The Mirada offers high performance silicone optics, die cast aluminum housing, 35,000+ lumens and is available with integral wireless controls.

Features & Specifications

Optical System

- State-of-the-Art one piece silicone optic sheet delivers industry leading optical control with an integrated gasket to provide IP66 rated sealed optical chamber in 1 component.
- Proprietary silicone refractor optics provide exceptional coverage and uniformity in IES Types 2, 3, 5W and FT.
- Silicone optical material does not yellow or crack with age and provides a minimum light transmittance of 93%.
- Zero uplight.
- Available in 5000K, 4000K, and 3000K (+/- 275K) color temperatures.
- Minimum CRI of 70. 90CRI available, consult factory for lead time.
- Integral Louver (IL) option available for improved back-light control without sacrificing street side performance. See page 5 for more details.

Electrical

- High-performance driver features over-voltage, under-voltage, short-circuit and over temperature protection.
- 0-10V dimming (10% - 100%) standard.
- Standard Universal Voltage (120-277 Vac) Input 50/60 Hz or optional High Voltage (347-480 Vac).
- L70 Calculated Life: >100k Hours (See Lumen Maintenance on Page 2)
- Total harmonic distortion: <20%
- Operating temperature: - -40°C to +50°C (-40°F to +122°F)
- Power factor: >.90
- Input power stays constant over life.
- Field replaceable surge protection device meets a minimum Category C Low operation (per ANSI/IEEE C62.41.2).
- High-efficacy LEDs mounted to metal-core circuit board to maximize heat dissipation
- Terminal block provided accepts up to 10ga wire.
- Components are fully encased in potting material for moisture resistance. Driver complies with FCC standards. Driver and key electronic components can easily be accessed.

Dimmable | WIRELESS CONTROLS | IP66 | RoHS COMPLIANT | ARRA Funding Compliant | TITLE 24 COMPLIANT | c UL us LISTED | DLC QPL LISTED | ida DARK SKY APPROVED

Product Dimensions

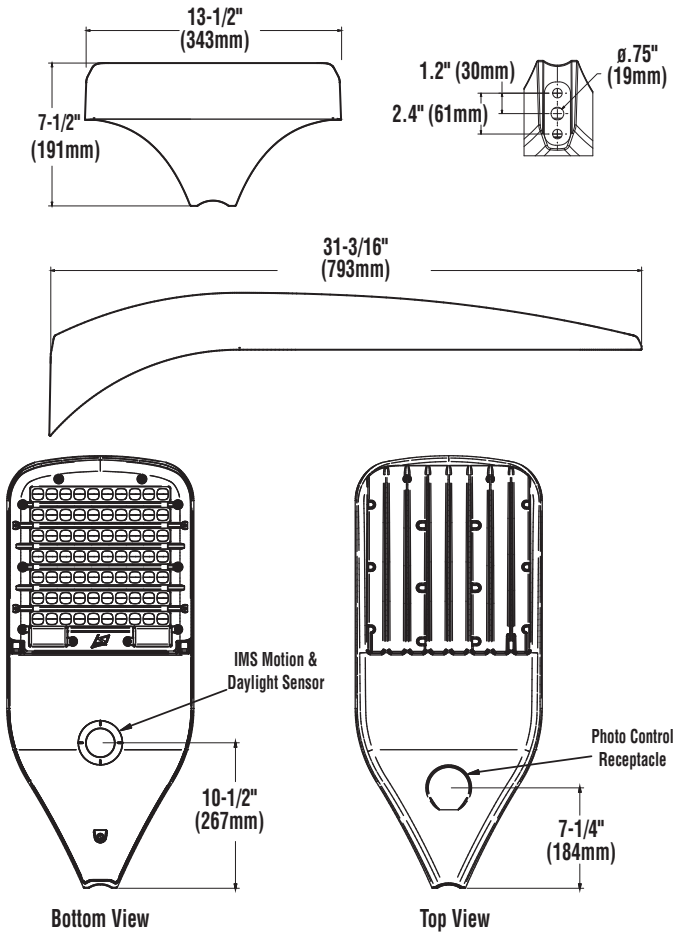

 ©LSI Industries Inc. All Rights Reserved.

Features & Specifications (Cont.)

Construction

- Rugged die-cast aluminum housing contains factory prewired driver and optical unit. Cast aluminum wiring access door located underneath.
- Designed to mount to round or square poles without need for pole adaptors.
- Luminaire is proudly made in the U.S. of U.S. and imported components.
- IP66 rated luminaire protects integral components from harsh environments.
- 3G rated for ANSI C136.31 high vibration applications
- Fixtures are finished with LSI's DuraGrip® polyester powder coat finishing process. The DuraGrip finish withstands extreme weather changes without cracking or peeling. Other standard LSI finishes available. Consult factory.
- Shipping weight: 30 lbs in carton.

Controls

- Optional integral passive infrared motion and daylight sensor activates switching of luminaire light levels (see page 6 for more details).
- 7-pin ANSI C136.41-2013 photocontrol receptacle option available for twist lock photocontrols or wireless control modules.
- LSI's AirLink™ wireless control system options reduce energy and maintenance costs while optimizing light quality 24/7. (see page 6 for more details)

Installation

- A single fastener secures the hinged door, underneath the housing and provides quick & easy access to the electrical compartment for installing/servicing.
- Included terminal block provides quick and easy on-site wiring.
- Utilizes LSI's traditional 3" drill pattern for easy fastening of LSI products. (See drawing on page 1)

Warranty

- LSI LED Fixtures carry a 5-year warranty.

Listings

- Listed to UL 1598 and UL 8750.
- RoHS Compliant.
- State of California Title 24 with IMS, ALSC, and ALSCH options.
- DesignLights Consortium® (DLC) qualified product. Not all versions of this product may be DLC qualified. Please check the DLC Qualified Products List at www.designlights.org/QPL to confirm which versions are qualified.
- IDA Compliant with 3000K Color Temperature selection.
- American Recovery and Reinvestment Act Funding Compliant.
- Suitable For wet Locations.
- IP66 rated Luminaire. IP66 rated optical chamber.
- 3G rated for ANSI C136.31 high vibration applications

Performance

ELECTRICAL DATA*

Lumens	120V	208V	240V	277V	347V	480V	Watts
SS	1.29A	0.75A	0.65A	0.56A	0.45A	0.32A	155
HO	1.98A	1.14A	0.99A	0.86A	0.69A	0.50A	238
VHO	2.58A	1.49A	1.29A	1.12A	0.89A	0.65A	310

*Electrical data at 25C (77F). Actual wattage may differ by +/-10%.

RECOMMENDED LUMEN MAINTENANCE[1]

Ambient	Initial[2]	25 hr[2]	50 hr[2]	75 hr[3]	100 hr[3]
0 C	100.0	99.00	98.82	98.65	98.47
10 C	100.0	99.03	98.62	98.22	97.82
20 C	100.0	96.71	94.06	91.48	88.97
25 C	100.0	92.74	86.49	80.67	75.24

1 - Lumen maintenance values at 25C are calculated per TM-21 based on LM-80 data and in-situ testing.
2 - In accordance with IESNA TM-21-11, Projected Values represent interpolated value based on time durations that are within six times the IESNA LM-80-08 total test duration for the device under testing.
3 - In accordance with IESNA TM-21-11, Calculated Values represent time durations that exceed six times the IESNA LM-80-08 total test duration for the device under testing.

LUMINAIRE EPA CHART - XALM

Single	0.6
D180°	1.1
D90°	0.9
T90°	1.9
TN120°	1.9
Q90°	2.1

 ©LSI Industries Inc. All Rights Reserved.

Performance (Cont.)

All published luminaire photometric testing performed to IESNA LM-79 standards by NVLAP, certified laboratory. ISO footcandle plots below demonstrate the Mirada (XALM) light patterns only. Not for total fixture output. For complete specifications and IES files, see website.

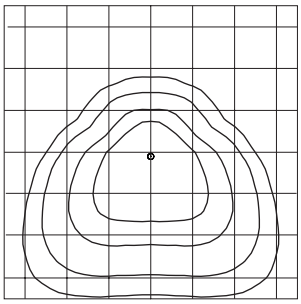

FT

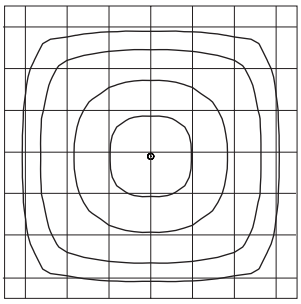

5W

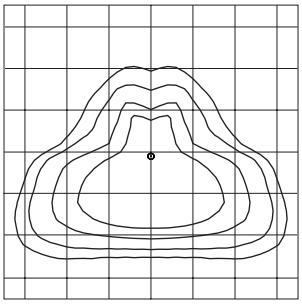

Type 3

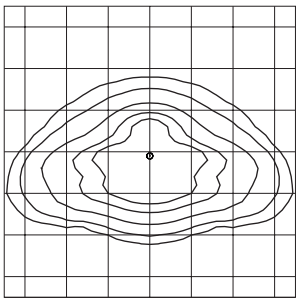

Type 2

DELIVERED LUMENS

Output	Distribution Type	3000K Delivered Lumens	3000K Efficacy	3000K BUG Rating	4000K Delivered Lumens	4000K Efficacy	4000K BUG Rating	5000K Delivered Lumens	5000K Efficacy	5000K BUG Rating	Wattage
SS	2	16488	107	B3-U0-G3	19666	128	B3-U0-G3	19865	129	B3-U0-G3	154
	2-IL	12162	78	B2-U0-G2	13035	83	B2-U0-G2	13035	83	B2-U0-G2	154
	3	17553	114	B2-U0-G3	18874	122	B2-U0-G3	18874	122	B2-U0-G3	154
	3-IL	14552	94	B1-U0-G3	15647	102	B1-U0-G3	16547	102	B1-U0-G3	154
	FT	15926	103	B2-U0-G3	18858	122	B3-U0-G3	18858	122	B3-U0-G3	154
	FT-IL	12406	80	B1-U0-G3	14362	93	B2-U0-G3	14362	93	B2-U0-G3	154
	5W	17716	114	B4-U0-G2	19050	122	B4-U0-G2	19050	122	B4-U0-G2	154
HO	2	24576	102	B4-U0-G3	27148	113	B4-U0-G3	28577	119	B4-U0-G3	242
	2-IL	18173	76	B2-U0-G3	20087	84	B2-U0-G3	21034	88	B3-U0-G3	242
	3	24654	102	B3-U0-G4	27520	114	B3-U0-G4	28667	119	B3-U0-G4	242
	3-IL	20130	83	B2-U0-G4	22471	93	B2-U0-G4	23407	97	B2-U0-G4	242
	FT	24973	104	B3-U0-G4	27876	116	B3-U0-G4	29037	120	B3-U0-G4	242
	FT-IL	18937	79	B2-U0-G4	21139	88	B2-U0-G4	22020	91	B2-U0-G4	242
	5W	25022	103	B5-U0-G3	27932	114	B5-U0-G3	29095	119	B5-U0-G3	242
VHO	2	29971	95	B4-U0-G4	33108	104	B4-U0-G4	34850	110	B4-U0-G4	315
	2-IL	21958	70	B3-U2-G3	24283	77	B3-U2-G3	25414	81	B3-U2-G3	315
	3	30344	97	B3-U0-G4	33872	108	B3-U0-G4	35282	113	B3-U0-G4	315
	3-IL	25003	80	B2-U0-G4	27910	89	B2-U0-G4	29073	93	B2-U0-G4	315
	FT	28742	91	B3-U0-G4	32084	102	B3-U0-G4	33421	106	B3-U0-G5	315
	FT-IL	22382	71	B2-U0-G4	24985	79	B3-U0-G4	26026	83	B3-U0-G4	315
	5W	30756	97	B5-U0-G4	34332	108	B5-U0-G4	35268	111	B5-U0-G4	315

*LED Chips are frequently updated therefore values may increase.

 ©LSI Industries Inc. All Rights Reserved.

Mirada - XALM
Outdoor LED Area Light

Ordering Guide

TYPICAL ORDER EXAMPLE: **XALM FT LED HO 40 UE BRZ ALSC**

Luminaire Prefix	Distribution	Light Source	Lumen Package*	Color Temp	Voltage	Finish	Optional Controls	Options
XALM	2 - Type II 3 - Type III FT - Type FT 5W - Type 5	LED	SS - Super Saver HO - High Output VHO - Very High Output *Consult factory for programmable wattages and lumen packages.	30 - 3000K 40 - 4000K 50 - 5000K	UE - Universal Voltage (120-277V) HV - 347-480 Universal Voltage (347-480V)	BRZ - Bronze BLK - Black GPT - Graphite MSV - Metallic Silver WHT - White PLP - Platinum Plus SVG - Satin Verde Green	**Wireless Controls System** [1,2] ALSC - AirLink Synapse Control System ALSCH - AirLink Synapse Control System - Host/Satelite DIM - 0-10 Volt Dimming (required for satellite fixtures) [3] (Blank) - None **Stand-Alone Controls** (Blank) - None DIM - 0-10 Volt Dimming (from external signal) [3,7] BLS - Bi-level Switching (from external 120-277V signal) [3,7] IMS - Integral Motion & Daylight Sensor [4,5]	PCR 7P - Photoelectric Control Receptacle [6] IL - Internal Louver House Side Shield 90C - 90 CRI [12]

Accessory Ordering Information

Description	Order Number	Description	Order Number
PC120 Photocell for use with PCR option (120V)	122514 [8]	DFK480 Double Fusing (480V)	DFK480 [9]
PC208-277 Photocell for use with PCR option (208V, 240V, 277V)	122515 [8]	FK347 Single Fusing (347V)	FK347 [9]
PC347 Photocell for use with PCR option (347V)	122516 [8]	ALSC UNV TL5 - AirLink 5 Pin Twist Lock Controller	661409
PC480 Photocell for use with PCR option (480V)	1225180 [8]	ALSC UNV TL7 - AirLink 7 Pin Twist Lock Controller	661410
FK120 Single Fusing (120V)	FK120 [9]	PMOS120 - 120V Pole-Mount Occupancy Sensor	518030CLR [10]
FK277 Single Fusing (277V)	FK277 [9]	PMOS208/240 - 208, 240V Pole-Mount Occupancy Sensor	534239CLR [10]
IMS/PC Remote Configurator Tool	584929	PMOS277 - 277V Pole-Mount Occupancy Sensor	518029CLR [10]
IL - Integral Louver HSS	639915	PMOS480 - 480V Pole-Mount Occupancy Sensor	534240CLR [10]
DFK208, 240 Double Fusing (208V, 240V)	DFK208, 240 [9]	BKS XBO WM * CLR Wall Mount Bracket	382132CLR

FOOTNOTES:
1 - For wireless controls information and accessories, see Controls Section.
2 - Requires a Site Manager and override switch. Not compatible with IMS or BLS Option.
3 - Not compatible with IMS.
4 - Not compatible with DIM, BLS or Wireless Control System.
5 - IMS is a Watt Stopper Dual Sensor (Daylight & Motion) which is field adjustable, via a hand held remote Illustrator tool, which must be ordered separately.
6 - Photocell must be ordered separately. 7 pin standard. See Accessories.
7 - Not available with IMS Option or Wireless Control System
8 - Factory installed PCR option required. See Options.
9 - Fusing must be located in hand hole of pole.
10 - To be used in conjunction with PCM/GCM control modules in fixture. Consult factory.
11 - Consult factory.
12 - Consult factory for DLC qualification information and lead times.

 ©LSI Industries Inc. All Rights Reserved.

Accessories/Options

Integral Louver (IL)

Optional Integral Louver available for improved back-light control without sacrificing street side performance.

Fixture Shown with Integral Louver (IL)

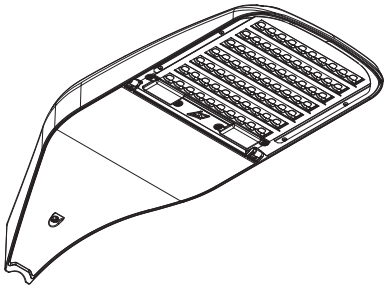

7 Pin Photoelectric Control

7-pin ANSI C136.41-2013 control receptacle option available for twist lock photocontrols or wireless control modules. Control accessories sold separately. Dimming leads from the receptacle will be connected to the driver dimming leads (Consult factory for alternate wiring).

Fixture Shown with PCR 7P

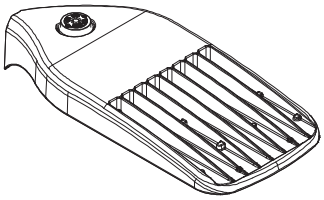

Controls

Occupancy Sensor / Daylight Sensor (IMS)

Optional integral passive infrared motion and daylight sensor activates switching of luminaire light levels. Standard Factory settings: High level light is activated and increased to full bright upon detection of motion; photocell is disabled, use Remote Configurator Tool to program. Lowlight level (10% maximum drive current) is activated when target zone is absent of motion activity for ~5 minutes. See coverage diagram for detection cone. Optional configurator tool allows for easy and safe programming of each luminaire from ground level.

Fixture Shown with IMS

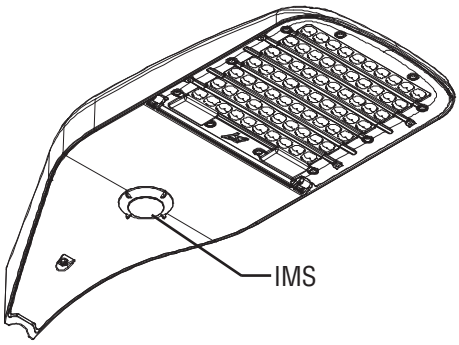

IMS/PC Remote Configurator Tool

Optional IMS Coverage Diagram

SIDE VIEW

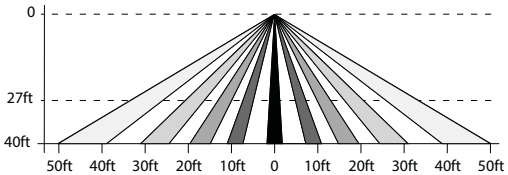

TOP VIEW

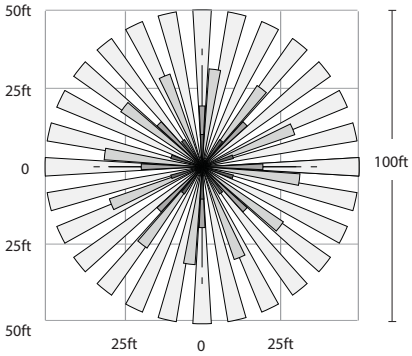

 ©LSI Industries Inc. All Rights Reserved.

Mirada - XALM
Outdoor LED Area Light

AirLink™
enabled by Synapse®

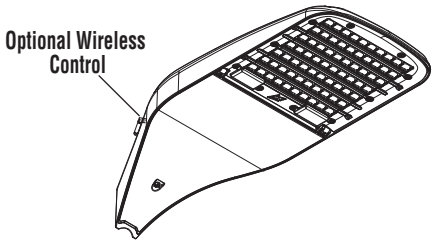

Wireless Lighting Controller

The AirLink integrated controller is a California Title 24 compliant lighting controller that provides real-time light monitoring and control with utility-grade power monitoring. It includes a 24V sensor input and power supply to connect up to two (2) sensors into the outdoor AirLink wireless lighting system.

The wireless integrated controller and twist lock controller are compatible with this fixture.

Features

- 2% Utility Grade Power Monitoring
- Up to 80% Savings through smart dimming
- True On/Off functionality via switched relay
- Seamlessly integrates into the outdoor AirLink wireless lighting control solution & Self-healing Mesh Networking
- Relay closes on power loss
- Supports a wide range of LED drivers and fixtures
- Class 1 / Class 2 0-10V Dimming Control
- Direct Connect up to two (2) to 24V Occupancy Sensors and Photocells (consult sales for compatible list)
- Secure, over-the-air upgrades to support future enhancements
- Excellent RF Range — 1,000ft LoS between controllers
- Available in a metal cased version with quick connect terminal blocks
- Lights default to on for safety

Specifications

Regulatory Approvals

- FCC, IC, CE certified
- cULus Listed
- California Title 24 compliant

Power and Performance

- Operating environmental: -40°F to 131°F (-40°C to 55°C)
- Input power: 100–277 VAC +/- 10% (Max 305V)47/64 Hz
- Switched output: Default ON; Zero Cross Switching
- Load rating: 5A @ 100V to 277V (+/- 10%)
- Dimming: 0–10V control; Output: Class 1/2 - 20mA Source Max / 50mA Sink Max
- Power monitoring: Utility grade - 2% accuracy
- Sensors inputs: 0–10V (photocell sensors), 0–24V (all other sensors); Sensor power supply: 24VDC @ 50mA

Other

- Dimensions: 8.2” L x 2.3” W x 1.3” H (209mm L x 59mm W x 33mm H) without antennas
- Radio: SNAP 2.4 GHz; 802.15.4; +20 dBm Transmit Power; -105 dBm Receive Sensitivity
- Warranty: 5 years

Contact LSI Controls

Sales
controls.sales@lsi-industries.com

Support
controls.support@lsi-industries.com
1 (800) 436-7800 (support, option 8)

More information
For more information on AirLink, visit our website at www.lsi-airlink.com/airlink

 ©LSI Industries Inc. All Rights Reserved.