DEVELOPMENT PLAN FOR

THE SHOPS at BROOKSIDE - BLOCK A PHASE II - SOUTH BUILDING

SWC CR N 600 W & CR W 900 N, McCORDSVILLE IN 46055

PROJECT LOCATION

PLAN SHEET INDEX

C0.0	TITLE SHEET
C2.0	SITE PLAN
C3.0	GRADING & DRAINAGE PLAN
C3.1	STORM SEWER PLAN & PROFILES
C4.0	STORMWATER POLLUTION PREVENTION PLAN
C4.1	STORMWATER POLLUTION PREVENTION DETAILS
C4.2	STORMWATER POLLUTION PREVENTION NOTES
C5.0	UTILITY PLAN
C7.0–C7.2	GENERAL DETAILS
C9.0	SPECIFICATIONS
L1.0	LANDSCAPE PLAN
E101	SITE LIGHTING PLAN (BY OTHERS)
TOPO	TOPOGRAPHIC SURVEY BY CROSSROAD ENGINEERS (03/11/2024)

REFERENCE STANDARDS/SPECIFICATIONS:

TOWN OF MCCORDSVILLE CONSTRUCTION STANDARDS & SPECIFICATIONS (10 SHEETS)
CITIZENS ENERGY GROUP WATER STANDARDS MANUALS

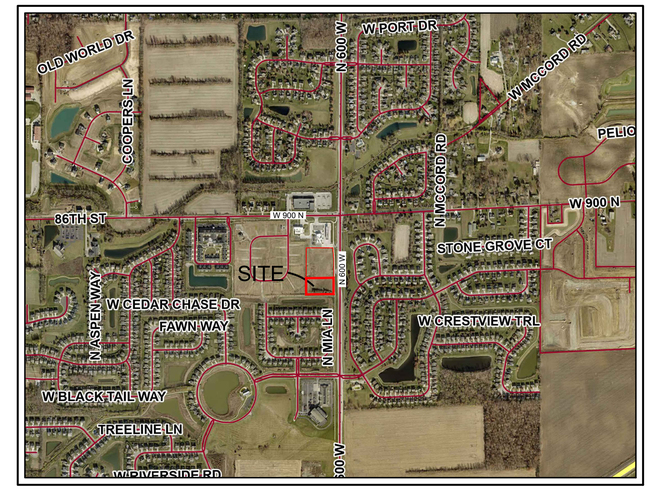

VICINITY MAP
SCALE: 1" = 1000'
NORTH

LAND DESCRIPTION

BLOCK A IN THE VILLAGES OF BROOKSIDE SECTION 16 RECORDED AS INSTRUMENT NO. 2022-12878, PLAT CABINET D, PAGE 210 IN THE RECORDER'S OFFICE OF HANCOCK COUNTY, INDIANA.

PROJECT DEVELOPER:
BDC REALTY GROUP, LLC
6274 S Fox Chase
Pendleton, Indiana 46064

ENGINEER:
CivilSite GROUP, INC.
718 Adams Street, Suite E
Carmel, Indiana 46032
Phone: (317) 810-1677
Email: bcross@civilsite.net

ARCHITECT:
INTEGRITY DESIGN, LLC
3128 Nichol Avenue
Anderson, Indiana 46011
Ph: (765) 608-3001

SURVEYOR:
Crossroad Engineers, P.C.
3417 Sherman Drive
Beech Grove, IN 46107
Contact: G.W. Charles, PE, PS
Phone: (317) 780-1555
Email: gwcharles@crossroadengineers.com

DEVELOPMENT SUMMARY

PROPOSED USE: RETAIL-MEDIUM
BUILDING(s) GROSS SQUARE FOOTAGE: = 10,206± S.F.
TOTAL SITE AREA = 5.69± Ac.
OPEN SPACE AREA = x.xx± Ac. (xx% of TOTAL LOT AREA)
IMPERVIOUS AREA COVERAGE = x.xx± Ac. (xx%)
CURRENT ZONING = VILLAGES AT BROOKSIDE PUD-AMENDMENT

PARKING SPACES PROVIDED = 77
PARKING SPACES REQUIRED = 34 (1 SPACE / 300 GSF)

ANTICIPATED CONSTRUCTION START/END DATE:
OCTOBER, 2025 / JULY 2026

UTILITY CONTACTS

Drainage & Streets:
Town of McCordsville - Engineering
6280 W 800 N
McCordsville, IN 46055
(317) 335-3604

Electric / Telecom:
NineStar Connect - Rusty Hansen
2243 E Main St,
Greenfield, IN 46140
(317) 326-3131
KHansen@ninestarconnect.com

Natural Gas:
Centerpoint Energy

Wastewater & Water:
Citizens Energy Group/CWA Authority, Inc.
2150 Dr. Martin Luther King Jr St
Indianapolis, IN 46202
Brad Hostetler - (317) 927-4351
bhostetler@citizensenergygroup.com

Streets:
Town of McCordsville
Hancock County Highway Department

DRAINAGE TILE NOTE

ALL DRAINAGE TILES ENCOUNTERED ON PROJECT SITE WILL BE PROVIDED A POSITIVE OUTLET.

STANDARDS

THE TOWN OF McCORDSVILLE & INDOT STANDARDS SHALL BE INCORPORATED BY REFERENCE INTO THESE PLANS FOR CONSTRUCTION ACTIVITY THROUGHOUT THE SITE AND INDOT RIGHT-OF-WAY

SPECIFICATIONS

NO ALTERNATE SPECIFICATIONS OR MATERIALS OR NEW MATERIALS MAY BE USED WITHOUT THE EXPRESS WRITTEN APPROVAL FROM THE TOWN OF PENDLETON PRIOR TO THE COMPLETION OF WORK.

INDIANA DEPARTMENT OF TRANSPORTATION LATEST EDITION OF SPECIFICATIONS & STANDARDS TO BE USED DURING CONSTRUCTION WITH THESE PLAN DOCUMENTS

REVISION RECORD

REV	DATE	DESCRIPTION	DES BY	APP BY
1	07/01/25	REV. PER TAC REVIEW	BSC	BSC

BRIAN S CROSS
REGISTERED
NO. PE10810647
STATE OF INDIANA
PROFESSIONAL ENGINEER
PRELIMINARY NOT FOR CONSTRUCTION
DATE: 06/06/2025

CSG PROJECT NUMBER
BRG.007

DRAWING NUMBER
C0.0
SHEET 1 OF 24

Indiana 811
Know what's below. Call before you dig.

EXISTING CONDITIONS NOTE

CONTRACTOR TO VERIFY ALL EXISTING CONDITIONS, INCLUDING UTILITIES AND DRAINAGE INFRASTRUCTURE BEFORE COMMENCING WITH CONSTRUCTION. CONTRACTOR TO NOTIFY ENGINEER OF ANY DISCREPANCIES.

TOPOGRAPHIC & BOUNDARY NOTE

ALL EXISTING HORIZONTAL AND VERTICAL INFORMATION HAS BEEN SHOWN PER A TOPOGRAPHIC SURVEY DATED 03/11/2024 PREPARED BY CROSSROAD ENGINEERG, P.C.; THEREFORE, CIVIL SITE GROUP, INC. CANNOT BE HELD RESPONSIBLE IF ACTUAL HORIZONTAL AND VERTICAL DATA IS DIFFERENT FROM THAT SHOWN ON THESE PLANS. CONTRACTOR IS RESPONSIBLE FOR FIELD VERIFICATION OF ALL EXISTING CONDITIONS PRIOR TO COMMENCING WITH CONSTRUCTION.

FLOOD NOTE

THIS LOT LIES ENTIRELY IN FLOOD HAZARD ZONE "X" AS SCALED FROM THE FLOOD INSURANCE RATE MAP (FIRM) FOR HANCOCK COUNTY, INDIANA, COMMUNITY NUMBER 180468, MAP NUMBER 18059C0016D, PANEL NUMBER 0016 D, DATED DECEMBER 4, 2007.

REFERENCE NFIP FIRM MAP #18059C0016D, EFFECTIVE DATE: DECEMBER 4, 2007

GRADING & UTILITY NOTE

CONTRACTOR TO VERIFY THE DEPTH AND LOCATION OF ALL EXISTING UTILITIES PRIOR TO COMMENCING CONSTRUCTION. PROPOSED DRIVEWAY CUTS MAY REQUIRE EXISTING UTILITY FACILITIES TO BE LOWERED AND/OR RELOCATED IN ORDER TO MAINTAIN MINIMUM STANDARDS OF COVER / VERTICAL SEPARATION, INCLUDING WATER, GAS, POWER, AND TELECOM.

NOTE

REFER TO ARCHITECTURAL & FOUNDATION PLANS FOR ALL BUILDING DIMENSIONS.

TOWN OF MCCORDSVILLE STANDARDS

CONTRACTOR TO CONSTRUCT ALL APPLICABLE SITE IMPROVEMENTS TO THE TOWN OF McCORDSVILLE CURRENT STANDARDS PER THE ATTACHED STANDARD DETAIL SHEETS.

ADA DECTABLE WARNING NOTE

ALL TRUNCATED DOME PLATES SHALL BE BLACK IN COLOR

DEVELOPER:
BDC REALTY GROUP, LLC
6274 SOUTH FOX CHASE
PENDLETON, INDIANA 46064
ATTN: DAVE CRAVENS
(765) 635-5559

ENGINEER:
CIVIL SITE GROUP, INC.
718 ADAMS STREET
CARMEL, INDIANA 46032
(317) 810-1677

SURVEYOR:
CROSSROAD ENGINEERS
3417 Sherman Drive
Beech Grove, IN 46107
ATTN: G.W. Charles, PE, PS
(317) 780-1555

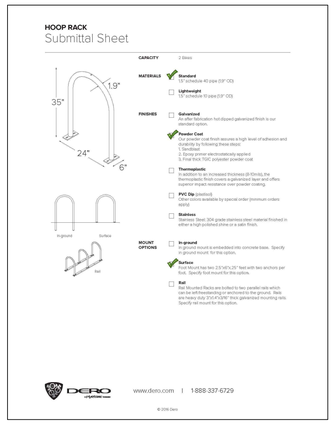

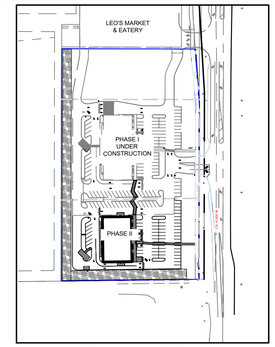

OVERALL SITE PLAN
SCALE: 1"=200'

NORTH
20 0 10 20
(IN FEET)
1 inch = 20 ft.

REVISION RECORD				
REV	DATE	DESCRIPTION	DES BY	APP BY
1	07/01/25	REV. PER TAC REVIEW	BSC	BSC

DEVELOPMENT SUMMARY

PROPOSED USE: RETAIL-MEDIUM
BUILDING(s) GROSS SQUARE FOOTAGE: = 10,206± S.F.
TOTAL SITE AREA = 5.69± Ac.
OPEN SPACE AREA = x.xx± Ac. (xx% of TOTAL LOT AREA)
IMPERVIOUS AREA COVERAGE = x.xx± Ac. (xx%)
CURRENT ZONING = VILLAGES AT BROOKSIDE PUD-AMENDMENT

PARKING SPACES PROVIDED = 77
PARKING SPACES REQUIRED = 34 (1 SPACE / 300 GSF)

ANTICIPATED CONSTRUCTION START/END DATE:
OCTOBER, 2025 / JULY 2026

LEGEND:

- R/W — PROPERTY BOUNDARY OR R/W (REFER TO ALTA/NSPS SURVEY)
- SAWCUT LIMITS (WHERE NECESSARY–TO BE CONFIRMED WITH INDOT INSPECTOR)
- (10) # OF PARKING SPACES IN ROW
- LIGHT DUTY ASPHALT PAVEMENT. SEE DETAIL 03/C7.0
  1.5" – 110#/SYD. HMA BITUMINOUS SURFACE 9.5mm ON
  2" – 330#/SYD. HMA BITUMINOUS INTERMEDIATE 19.0mm ON
  6" COMPACTED AGGREGATE #53 BASE ON ENGR. APPROVED GEOGRID** ON COMPACTED SUBGRADE OR TREATED SUBGRADE.
  ** DESIGNATES CONSTRUCTION ALTERNATE IF DETERMINED IS NEEDED AFTER RESULTS OF SUBGRADE PROOF ROLL
- HEAVY DUTY ASPHALT PAVEMENT. SEE DETAIL 02/C7.0
  1.5" – 110#/SYD. HMA BITUMINOUS SURFACE 9.5mm ON
  3" – 330#/SYD. HMA BITUMINOUS INTERMEDIATE 19.0mm ON
  8" COMPACTED AGGREGATE #53 BASE ON ENGR. APPROVED GEOGRID** ON COMPACTED SUBGRADE OR TREATED SUBGRADE.
  ** DESIGNATES CONSTRUCTION ALTERNATE IF DETERMINED IS NEEDED AFTER RESULTS OF SUBGRADE PROOF ROLL
- PROPOSED CONCRETE PAVEMENT. SEE DETAIL 01/C7.0
  8" CONC. PAVEMENT ON
  SUBGRADE TREATMENT TYPE II – (6" COMPACTED COARSE AGGREGATE INDOT #53 STONE) ON COMPACTED SUBGRADE
- PROPOSED CONCRETE SIDEWALK
- PROPOSED PAINTED DIAGONAL STRIPED ISLAND

PLAN NOTES:

- (A) 6" STRAIGHT CONC. CURB. SEE DETAIL 05/C7.0
- (A1) 1'–2" WIDE STRAIGHT CONC. CURB/WALK ALONG SOUTH BUILDING WALL
- (A2) 2'± WIDE STRAIGHT CONC. CURB/WALK ALONG NORTH BUILDING WALL
- (B#) 4" OR 6" CONC. FILLED BOLLARD PAINTED GLOSS BLACK AS DENOTED SEE DETAIL 17/C7.0
- (BR) DERO HOOP BIKE RACK HR–FT–EPX BLACK
- (C) COMBINED CURB & WALK. SEE DETAIL 04/C7.0
- (D) CONCRETE SIDEWALK. SEE DETAIL 07/C7.2
- (DE) "DO NOT ENTER" SIGN, R5–1 (30"x30")
- (DW) DETECTABLE WARNING STRIP (COLOR BLACK). SEE DETAIL 06/C7.0
- (FL) FLUSH WITH PAVEMENT
- (F) TYPICAL PARKING SPACE MARKING. SEE DETAILS 08 & 10/C7.0
- (G) TRAFFIC SIGNAGE. SEE DETAIL 15 & 16/C7.0
- (J) PRECAST CONC. WHEEL STOPS (QTY 5)
- (T) TAPER CURB FLUSH INTO WALK/PAVEMENT
- (TR) TRASH ENCLOSURE. REFER TO ARCH. PLANS FOR DETAILS
- (SS) STOP SIGN, R1–1 (30"x30")
- (SW) COLORED CONCRETE PAVEMENT (MATCH LEO'S) FOR PEDESTRIAN WALKWAYS: 6" CONC W/ WWF (1.6x1.6), OR F.R.; ON 6" COMP. #53 STONE; ON COMPACTED SUBGRADE
- (RT) "RIGHT TURN ONLY" SIGN
- (OS) OUTDOOR SEATING AREA. REFER TO ARCH. PLANS FOR DETAILS
- (FN) OUTDOOR SEATING FENCING. REFER TO ARCH. PLANS FOR DETAILS

SITE LAYOUT NOTES

1. ALL CONSTRUCTION METHODS AND MATERIALS MUST CONFORM TO CURRENT STANDARDS AND SPECIFICATIONS OF THE FEDERAL, STATE, COUNTY, CITY, OR LOCAL REQUIREMENTS, WHICHEVER HAS JURISDICTION.
2. ALL PARKING STRIPES ARE TO BE 4" PAINTED WHITE. UNLESS OTHERWISE NOTED ON THE PLANS, DETAILS, OR SPECIFICATIONS.
3. ALL DIMENSIONS ARE TO EDGE OF PAVEMENT, FACE OF CURB/SIDEWALK, RADII TO BACK OF CURB, WHERE APPLICABLE.
4. ALL DIMENSIONS ARE TO OUTSIDE FACE OF BRICK OR FACING MATERIAL, WHERE APPLICABLE. CONTRACTOR TO REFER TO ARCHITECTURAL DRAWINGS FOR ACTUAL BUILDING DIMENSIONS.
5. THE CONTRACTOR SHALL VERIFY ALL DIMENSIONS AND ELEVATIONS IN THE FIELD PRIOR TO THE START OF CONSTRUCTION. THE CONTRACTOR SHALL BE RESPONSIBLE FOR ALL FIELD DIMENSIONS AND ELEVATIONS DURING THE ENTIRE CONSTRUCTION SCHEDULE. IF ANY DISCREPANCIES ARE FOUND IN THESE PLANS FROM ACTUAL FIELD DIMENSIONS, THE CONTRACTOR SHALL CONTACT THE ENGINEER IMMEDIATELY.
6. PROVIDE SMOOTH TRANSITION FROM NEWLY PAVED AREAS TO EXISTING AREAS AS NECESSARY. ALL AREAS WHERE PROPOSED PAVEMENT MEETS EXISTING PAVEMENT, THE EXISTING EDGE OF PAVEMENT SHALL BE FREE OF ALL LOOSE DEBRIS. THE EDGE OF EXISTING ASPHALT PAVEMENT SHALL BE PROPERLY SEALED WITH A TACK COAT MATERIAL IN ALL AREAS WHERE NEW ASPHALT PAVEMENT IS INDICATED TO JOIN EXISTING.
7. ALL EXCAVATED AREAS TO BE SEEDED AND/OR SODDED AFTER FINISH GRADING UNLESS OTHERWISE NOTED. ALL NEWLY SODDED/SEEDED AREAS SHALL HAVE A MINIMUM OF 4" OF TOPSOIL. HOLD SOIL DOWN 1" FROM PAVEMENT ELEVATION. CONTRACTOR TO SUPPLY STRAW MULCH WHERE GRASS SEED HAS BEEN PLANTED.
8. RESURFACE OR RECONSTRUCT AT LEAST TO ORIGINAL CONDITIONS ALL AREAS WHERE TRAFFIC BY CONTRACTORS, SUBCONTRACTORS OR SUPPLIERS HAVE DAMAGED EXISTING PAVEMENT, LAWNS OR OTHER IMPROVEMENTS DURING CONSTRUCTION, AFTER CONSTRUCTION WORK IS COMPLETE.
9. ALL UTILITY TRENCHES WITHIN 5 FEET OF PAVEMENT SHALL BE COMPLETELY BACKFILLED WITH GRANULAR BACKFILL.
10. ALL RADII INDICATED SHALL BE CONSTRUCTED AS CIRCULAR ARCS.
11. ALL PARKING SPACE DIMENSIONS ARE TO BE 9' WIDE BY 19' DEEP UNLESS OTHERWISE SPECIFIED.

BDC REALTY GROUP, LLC
6274 S FOX CHASE
PENDLETON, IN 46064

CIVIL SITE GROUP, INC.
CivilSite GROUP, INC.
718 Adams Street, Suite E
Carmel, Indiana 46032
Ph: (317) 810-1677

BRIAN S CROSE REGISTERED P.E. 10100054 STATE OF INDIANA PROFESSIONAL ENGINEER
PRELIMINARY NOT FOR CONSTRUCTION
DATE: 06/06/2025

DWN BY:	BSC
CHKD. BY:	BSC
SCALE:	1" = 20'
DATE:	06/06/25

THE SHOPS at BROOKSIDE - BLOCK A
CR 600 W
McCORDSVILLE, IN 46055

SITE PLAN
PHASE II - SOUTH BUILDING

PROJECT NUMBER
BRG.007

DRAWING NUMBER
C2.0
SHEET 2 OF 24

Indiana 811
Know what's below. Call before you dig.

CASTING NOTE

STORM INLET CASTINGS TO REQUIRE A "NO DUMPING" MESSAGE PER THE TOWN OF MCCORDSVILLE STANDARDS.

BENCHMARK

SITE BENCHMARKS:
(LOCATIONS SHOWN ON SURVEY)

TBM #400 CUT "X" ON WEST ANCHOR BOLT OF SIGNAL POLE, LOCATED IN SOUTHWEST QUAD OF "CR 900 N" AND "CR 600 W".

ELEV. = 850.90 (NAVD 88)

TOPOGRAPHIC & BOUNDARY NOTE

ALL EXISTING HORIZONTAL AND VERTICAL INFORMATION HAS BEEN SHOWN PER A TOPOGRAPHIC SURVEY DATED 03/11/2024 PREPARED BY CROSSROAD ENGINEERG, P.C.; THEREFORE, CIVIL SITE GROUP, INC. CANNOT BE HELD RESPONSIBLE IF ACTUAL HORIZONTAL AND VERTICAL DATA IS DIFFERENT FROM THAT SHOWN ON THESE PLANS. CONTRACTOR IS RESPONSIBLE FOR FIELD VERIFICATION OF ALL EXISTING CONDITIONS PRIOR TO COMMENCING WITH CONSTRUCTION.

GRADING & UTILITY NOTE

CONTRACTOR TO VERIFY THE DEPTH AND LOCATION OF ALL EXISTING UTILITIES PRIOR TO COMMENCING CONSTRUCTION. PROPOSED DRIVEWAY CUTS MAY REQUIRE EXISTING UTILITY FACILITIES TO BE LOWERED AND/OR RELOCATED IN ORDER TO MAINTAIN MINIMUM STANDARDS OF COVER / VERTICAL SEPARATION, INCLUDING WATER, GAS, POWER, AND TELECOM.

FLOOD NOTE

THIS LOT LIES ENTIRELY IN FLOOD HAZARD ZONE "X" AS SCALED FROM THE FLOOD INSURANCE RATE MAP (FIRM) FOR HANCOCK COUNTY, INDIANA, COMMUNITY NUMBER 180468, MAP NUMBER 18059C0016D, PANEL NUMBER 0016 D, DATED DECEMBER 4, 2007.

REFERENCE NFIP FIRM MAP #18059C0016D, EFFECTIVE DATE: DECEMBER 4, 2007

STORM SEWER SYSTEM NOTE

ALL ON-SITE STORM SEWER INFRASTRUCTURE TO BE CONSTRUCTED WITH THIS PROJECT SHALL BE PRIVATELY OWNED AND MAINTAINED.

NORTH

20 0 10 20
(IN FEET)
1 inch = 20 ft.

REVISION RECORD

REV	DATE	DESCRIPTION	DES BY	APP BY
1	07/01/25	REV. PER TAC REVIEW	BSC	BSC

DEVELOPER:
BDC REALTY GROUP, LLC
6274 SOUTH FOX CHASE
PENDLETON, INDIANA 46064
ATTN: DAVE CRAVENS
(765) 635-5559

ENGINEER:
CIVIL SITE GROUP, INC.
718 ADAMS STREET
CARMEL, INDIANA 46032
(317) 810-1677

SURVEYOR:
CROSSROAD ENGINEERS
3417 Sherman Drive
Beech Grove, IN 46107
ATTN: G.W. Charles, PE, PS
(317) 780-1555

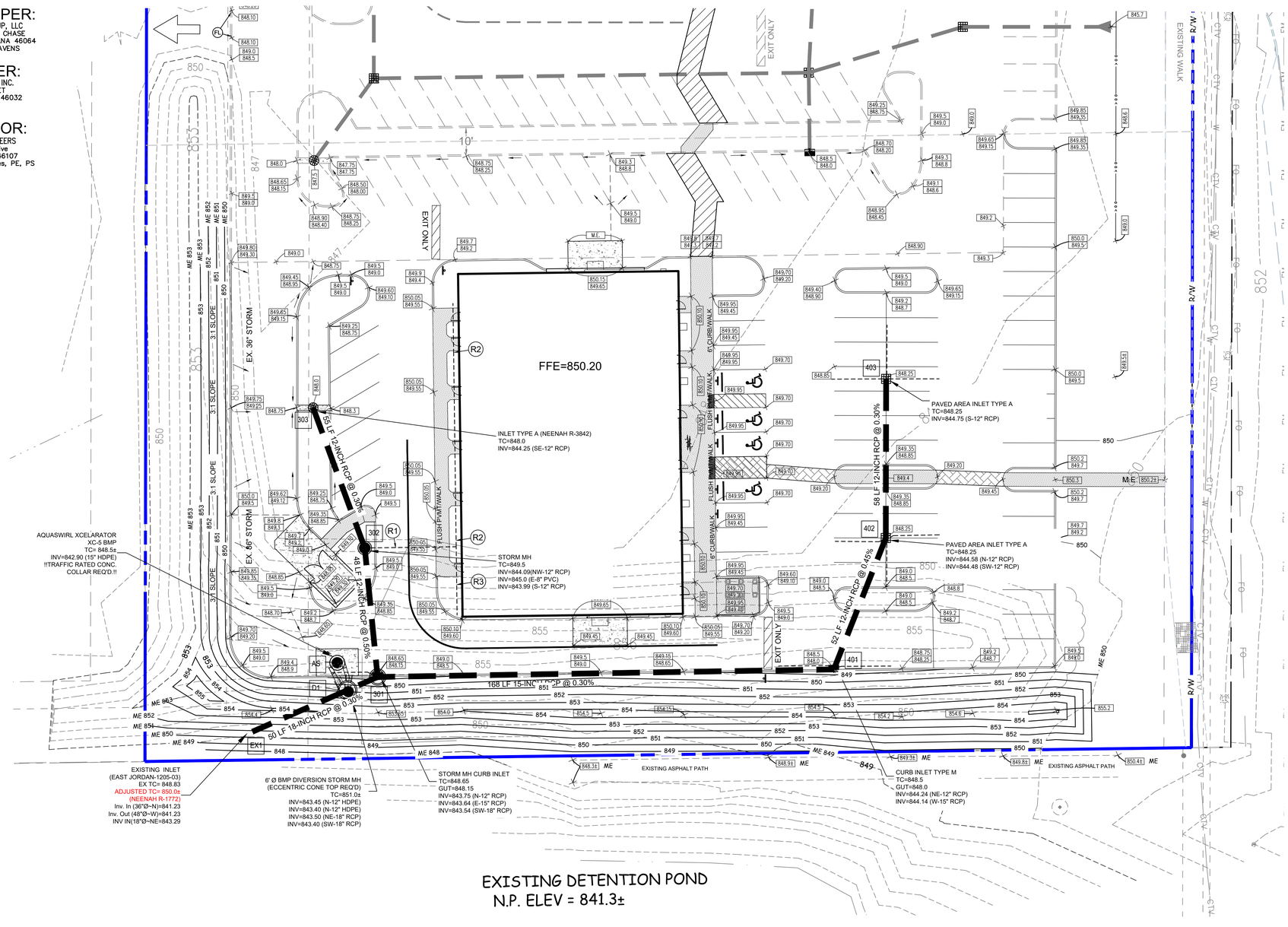

PLAN NOTES:

(R1) APPROX. 35± LF OF 8" PVC (SDR35 @1.0% MIN. SLOPE) ROOF DRAIN LEADER WITH RISERS, ADAPTERS FOR CONNECTIONS, BENDS, FITTINGS, & CLEANOUTS AT BENDS > 22.5° FOR ROOF CONNECTIONS; REDUCE TO 6" TO BLDG. DOWNSPOUTS

(R2) APPROX. 90± LF OF 8" PVC (SDR35 @0.75% MIN. SLOPE) ROOF DRAIN LEADER WITH RISERS, ADAPTERS FOR CONNECTIONS, BENDS, FITTINGS, & CLEANOUTS AT BENDS > 22.5° FOR ROOF CONNECTIONS; REDUCE TO 6" TO BLDG. DOWNSPOUTS

(R3) APPROX. 25± LF OF 6" PVC (SDR35 @0.75% MIN. SLOPE) ROOF DRAIN LEADER WITH RISERS, ADAPTERS FOR CONNECTIONS, BENDS, FITTINGS, & CLEANOUTS AT BENDS > 22.5° FOR ROOF CONNECTIONS; REDUCE TO 6" TO BLDG. DOWNSPOUTS

(FL) FLUSH WITH PAVEMENT

LEGEND:

- R/W — PROPERTY BOUNDARY OR R/W (REFER TO ALTA/NSPS SURVEY)
- PROPOSED STORM SEWER
- PROPOSED INLET SUB-SURFACE DRAIN / ROOF DRAINS
- PROPOSED STORM STRUCTURE
- EX. UNDERGROUND STORM SEWER LINE
- 848.0 — PROPOSED SPOT ELEVATION
- 848.5 / 848.0 — PROPOSED TOP OF CURB ELEVATION / PROPOSED PVMT ELEVATION
- ME — MATCH EXISTING GRADE
- TC — TOP OF CURB/STORM CASTING ELEVATION
- INV — STORM SEWER INVERT ELEVATION
- 849 — PROPOSED CONTOUR
- 850 — EXISTING CONTOUR
- PROPOSED DRAINAGE SWALE
- EXISTING SITE OVERFLOW ROUTING

GENERAL NOTES

CONTRACTOR TO KEEP EXISTING PAVEMENT SURROUNDING THE SITE (CR N 600 W) "BROOM CLEAN" AND FREE OF SOIL OR AGGREGATE THAT MIGHT BE BROUGHT OFF-SITE.

DEPENDING ON THE CONSTRUCTION SEASON, MOISTURE CONTENT AND PROPERTIES OF THE SOILS ON SITE, CHEMICAL MODIFICATIONS AND/OR LIME STABILIZATION MAY BE REQUIRED. SEE SHEET C9.0 FOR SPECIFICATIONS.

ALL CONCRETE PIPE JOINTS SHALL BE CONTINUOUS O-RING RUBBER GASKET CONFORMING TO ASTM C 443

CONTRACTOR SHALL SUBMIT PRECAST STORM SEWER STRUCTURE SHOP DRAWINGS TO ENGINEER FOR REVIEW/APPROVAL PRIOR TO MANUFACTURING.

GRADING NOTES

1. ALL CONSTRUCTION METHODS AND MATERIALS MUST CONFORM TO CURRENT STANDARDS AND SPECIFICATIONS OF THE FEDERAL, STATE, COUNTY, CITY OR LOCAL REQUIREMENTS, WHICHEVER HAS JURISDICTION.
2. THE CONTRACTOR SHALL VERIFY ALL DIMENSIONS IN THE FIELD PRIOR TO STARTING CONSTRUCTION. THE CONTRACTOR SHALL BE RESPONSIBLE FOR ALL FIELD DIMENSIONS. IF ANY DISCREPANCIES ARE FOUND IN THESE PLANS FROM THE ACTUAL FIELD CONDITIONS, THE CONTRACTOR SHALL NOTIFY THE ENGINEER IMMEDIATELY.
3. THE EXCAVATING CONTRACTOR MUST TAKE PARTICULAR CARE WHEN EXCAVATING IN AND AROUND EXISTING UTILITY LINES AND EQUIPMENT. VERIFY COVER REQUIREMENTS BY UTILITY CONTRACTORS AND/OR UTILITY COMPANIES SO AS NOT TO CAUSE DAMAGE.
4. THE CONTRACTOR SHALL NOTIFY ALL UTILITY COMPANIES 72 HOURS BEFORE CONSTRUCTION IS TO START, TO VERIFY IF ANY UTILITIES ARE PRESENT ON SITE. ALL VERIFICATIONS (LOCATION, SIZE AND DEPTH) SHALL BE MADE BY THE APPROPRIATE UTILITY COMPANIES. WHEN EXCAVATING IS AROUND OR OVER EXISTING UTILITIES, THE CONTRACTOR MUST NOTIFY THE UTILITY COMPANY SO A REPRESENTATIVE OF THAT UTILITY COMPANY CAN BE PRESENT TO INSTRUCT AND OBSERVE DURING CONSTRUCTION.
5. TRENCHES FOR ALL STORM DRAIN LINES SHALL BE BACKFILLED COMPLETELY WITH ENGINEERED GRANULAR MATERIAL IF WITHIN 5 FEET OF PAVEMENT.
6. AFTER STRIPPING TOPSOIL MATERIAL, PROOFROLL WITH A MEDIUM WEIGHT ROLLER TO DETERMINE LOCATIONS OF ANY POCKETS OF UNSUITABLE MATERIAL. THE NECESSITY FOR SUBDRAINS AND/OR REMOVAL OF ANY UNSUITABLE MATERIAL WITHIN THE PROPOSED PARKING AREAS WILL BE DETERMINED AT THE TIME OF CONSTRUCTION.
7. PROVIDE POSITIVE DRAINAGE WITHOUT PONDING, IN ALL AREAS, AFTER INSTALLATION, CONTRACTOR TO TEST FOR, AND CORRECT, IF ANY, "BIRD BATH" CONDITIONS.
8. ALL PROPOSED SPOT ELEVATIONS ARE THE FINAL PAVEMENT AND FINAL GRADE ELEVATIONS.
9. SEE APPROPRIATE DETAILS TO DETERMINE SUBGRADE ELEVATIONS BELOW FINISH GRADE ELEVATIONS INDICATED.
10. FLOW LINE ELEVATIONS GIVEN AT END OF CONCRETE END SECTIONS.
11. SIDEWALK AGAINST BUILDING SHALL SLOPE AWAY FROM BUILDING AT 1.04% SLOPE MIN.

BDC REALTY GROUP, LLC
6274 S FOX CHASE
PENDLETON, IN 46064

CIVIL SITE GROUP, INC.
718 Adams Street, Suite E
Carmel, Indiana 46032
Ph: (317) 810-1677

PRELIMINARY
NOT FOR CONSTRUCTION
BRIAN S CROUCH
REGISTERED
PE10100647
STATE OF INDIANA
PROFESSIONAL ENGINEER
DATE: 06/06/2025

DWN BY:	BSC
CHKD. BY:	BSC
SCALE:	1" = 20'
DATE:	06/06/25

THE SHOPS at BROOKSIDE - BLOCK A
CR 600 W
McCORDSVILLE, IN 46055

GRADING & DRAINAGE PLAN
PHASE II - SOUTH BUILDING

PROJECT NUMBER
BRG.007

DRAWING NUMBER
C3.0
SHEET 3 OF 24

Indiana 811
Know what's below. Call before you dig.

CASTING NOTE

STORM INLET CASTINGS TO REQUIRE A "NO DUMPING" MESSAGE PER THE TOWN OF MCCORDSVILLE STANDARDS.

DEVELOPER:
BDC REALTY GROUP, LLC
6274 SOUTH FOX CHASE
PENDLETON, INDIANA 46064
ATTN: DAVE CRAVENS
(765) 635-5559

ENGINEER:
CIVIL SITE GROUP, INC.
718 ADAMS STREET
CARMEL, INDIANA 46032
(317) 810-1677

SURVEYOR:
CROSSROAD ENGINEERS
3417 Sherman Drive
Beech Grove, IN 46107
ATTN: G.W. Charles, PE, PS
(317) 780-1555

NORTH

30 0 15 30
(IN FEET)
1 inch = 30 ft.

REVISION RECORD

REV	DATE	DESCRIPTION	DES BY	APP BY

LEGEND:

- R/W — PROPERTY BOUNDARY OR R/W (REFER TO ALTA/NSPS SURVEY)
- PROPOSED STORM SEWER
- PROPOSED SUB-SURFACE INLET/ROOF DRAIN
- PROPOSED STORM STRUCTURE
- EX. UNDERGROUND STORM SEWER LINE
- 848.0 — PROPOSED SPOT ELEVATION
- 848.5 / 848.0 — PROPOSED TOP OF CURB ELEVATION / PROPOSED PVMT ELEVATION
- ME — MATCH EXISTING GRADE
- TC — TOP OF CURB/STORM CASTING ELEVATION
- INV — STORM SEWER INVERT ELEVATION
- 849 — PROPOSED CONTOUR
- 850 — EXISTING CONTOUR
- PROPOSED DRAINAGE SWALE

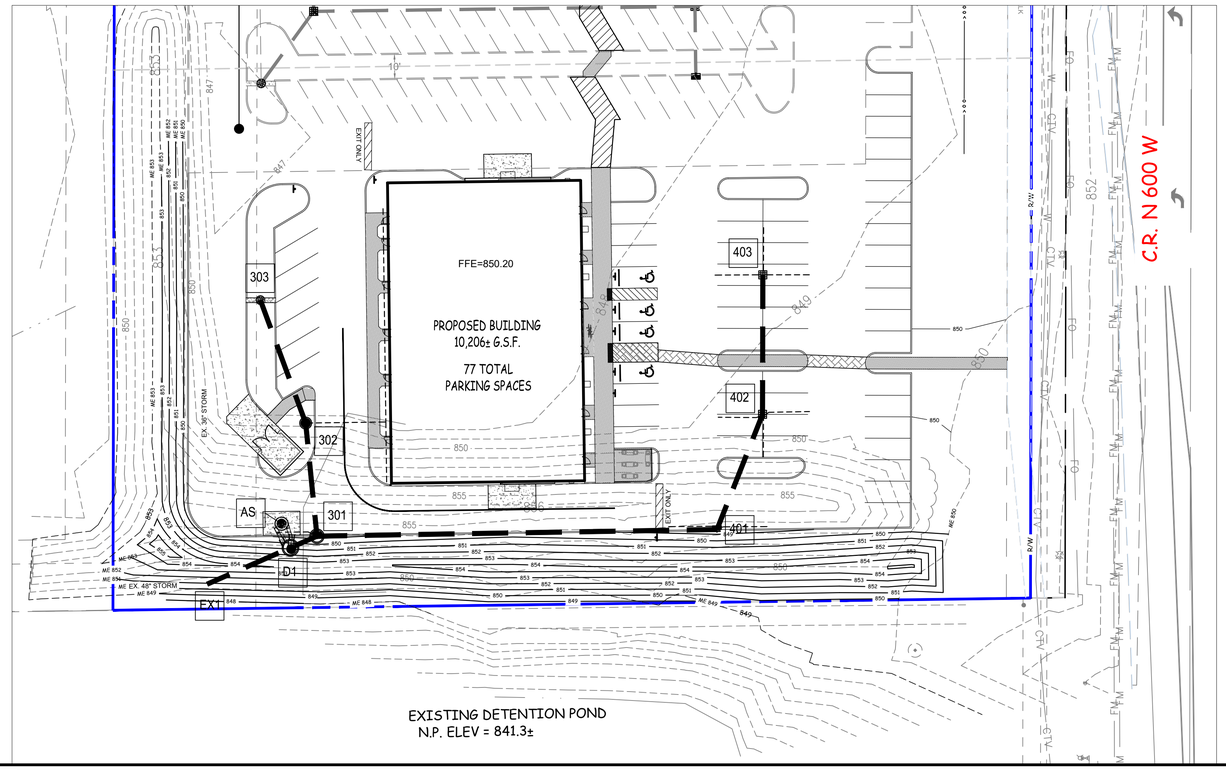

STORM SEWER SYSTEM NOTE

ALL ON-SITE STORM SEWER INFRASTRUCTURE TO BE CONSTRUCTED WITH THIS PROJECT SHALL BE PRIVATELY OWNED AND MAINTAINED.

BENCHMARK

SITE BENCHMARKS:
(LOCATIONS SHOWN ON SURVEY)

TBM #400 CUT "X" ON WEST ANCHOR BOLT OF SIGNAL POLE, LOCATED IN SOUTHWEST QUAD OF "CR 900 N" AND "CR 600 W".

ELEV. = 850.90 (NAVD 88)

TOPOGRAPHIC & BOUNDARY NOTE

ALL EXISTING HORIZONTAL AND VERTICAL INFORMATION HAS BEEN SHOWN PER A TOPOGRAPHIC SURVEY DATED 03/11/2024 PREPARED BY CROSSROAD ENGINEERG, P.C.; THEREFORE, CIVIL SITE GROUP, INC. CANNOT BE HELD RESPONSIBLE IF ACTUAL HORIZONTAL AND VERTICAL DATA IS DIFFERENT FROM THAT SHOWN ON THESE PLANS. CONTRACTOR IS RESPONSIBLE FOR FIELD VERIFICATION OF ALL EXISTING CONDITIONS PRIOR TO COMMENCING WITH CONSTRUCTION.

18 " OF VERTICAL SEPARATION MUST BE MAINTAINED FOR ALL UTILITY CROSSINGS.

STORM SEWER PLAN

PROFILE SCALE: 1"=50'

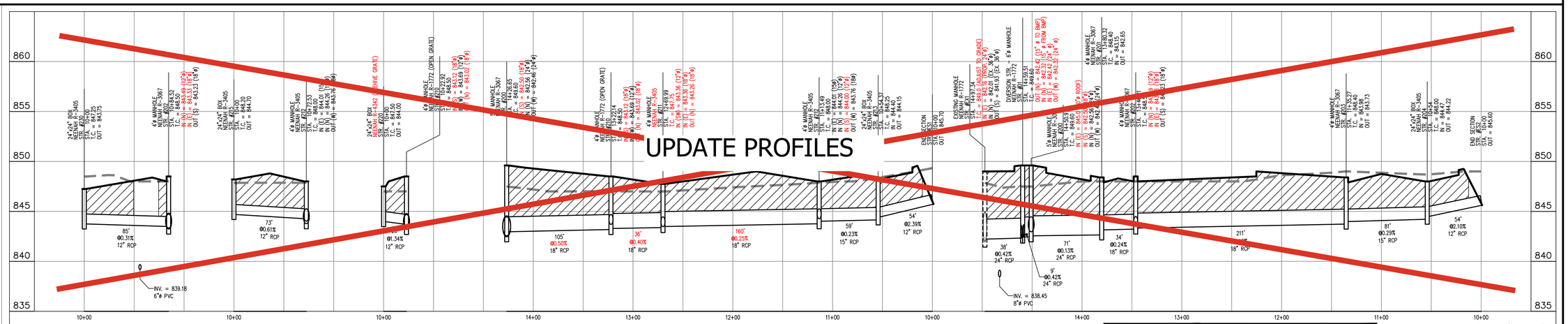

STORM SEWER PROFILE

BDC REALTY GROUP, LLC
6274 S FOX CHASE
PENDLETON, IN 46064

CIVIL SITE GROUP, INC.
718 Adams Street, Suite E
Carmel, Indiana 46032
Ph: (317) 810-1677

PRELIMINARY NOT FOR CONSTRUCTION
DATE: 06/06/2025

DWN BY:	BSC
CHKD. BY:	BSC
SCALE:	1" = 30'
DATE:	06/06/25

THE SHOPS at BROOKSIDE - BLOCK A
CR 600 W
McCORDSVILLE, IN 46055

STORM SEWER PLAN & PROFILE
PHASE II - SOUTH BUILDING

PROJECT NUMBER
BRG.007

DRAWING NUMBER
C3.1
SHEET 4 OF 24

SOILS DESCRIPTIONS & LIMITATIONS

1. Crosby Silt Loam (YcuA – 32.7% Site) The Crosby series consists of very deep, somewhat poorly drained soils that are moderately deep to dense till on till plains. These soils formed in loamy till that can be capped with up to 22 inches of loess or silty material. Permeability is moderate or moderately slow in and above the argillic horizon and slow or very slow below the argillic horizon. Slope ranges from 0 to 6 percent. Subject soil does not present any foreseeable limitations to the proposed development.

2. Brookston Silty Clay Loam (YbvA – 67.3% Site) The Brookston series consists of very deep, poorly drained soils formed in up to 20 inches of silty material and the underlying loamy till in depressions on till plains and moraines. Permeability is moderate in the subsoil and moderately slow in the underlying material. Slope ranges from 0 to 3 percent. Subject soil does not present any foreseeable limitations to the proposed development. Given that this soil typically shows high moisture content and is a hydric soil, permeability may be moderate, soil chemical modifications (i.e. lime stabilization) may likely be required.

SWPP TRAINED INDIVIDUAL:

Self-inspections - A trained individual shall perform visual inspections of the project site. A trained individual is an individual who is trained and experienced in the principles of stormwater management, including erosion and sediment control as is demonstrated by completion of coursework, state registration, professional certification, or annual training that enable the individual to make judgments regarding stormwater management, treatment, and monitoring.

1) The frequency of self-inspections are:
   a. At least once every work week;
   b. Within twenty-four (24) hours after qualifying precipitation event, which is precipitation accumulation equal to, or greater than, one-half (0.50) inch of rainfall within a 24-hour period. Inspections that were conducted twenty-four (24) hours prior to a qualifying precipitation event meet this requirement.
   c. If there are multiple qualifying precipitation events occur during the week no more than three (3) inspections are required within that week.

NORTH

30 0 15 30

(IN FEET)
1 inch = 30 ft.

REVISION RECORD

REV	DATE	DESCRIPTION	DES BY	APP BY
1	07/01/25	REV. PER TAC REVIEW	BSC	BSC

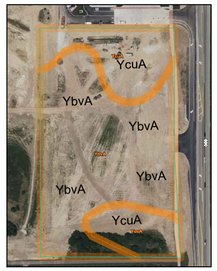

SOILS MAP
SCALE: 1" = 200'
NORTH

CASTING NOTE

STORM INLET CASTINGS TO REQUIRE A "NO DUMPING" MESSAGE PER THE TOWN OF PENDLETON STANDARDS.

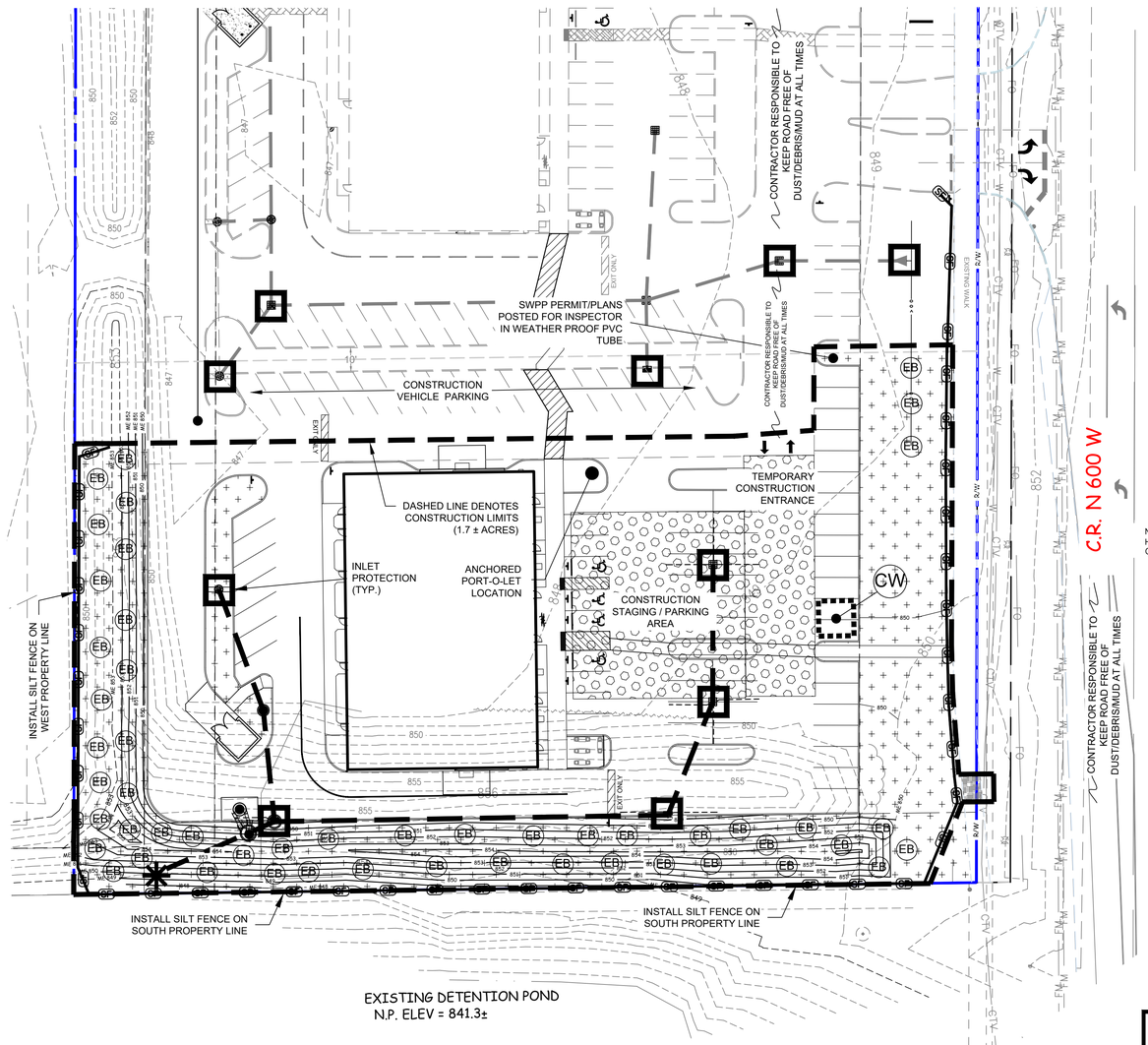

FLOOD NOTE

THIS LOT LIES ENTIRELY IN FLOOD HAZARD ZONE "X" AS SCALED FROM THE FLOOD INSURANCE RATE MAP (FIRM) FOR HANCOCK COUNTY, INDIANA, COMMUNITY NUMBER 180468, MAP NUMBER 18059C0016D, PANEL NUMBER 0016 D, DATED DECEMBER 4, 2007.

REFERENCE NFIP FIRM MAP #18059C0016D, EFFECTIVE DATE: DECEMBER 4, 2007

DEVELOPMENT SUMMARY

TOTAL SITE AREA = 5.69± ACRES
TOTAL DISTURBED AREA = 1.7± ACRES

TOPOGRAPHIC & BOUNDARY NOTE

ALL EXISTING HORIZONTAL AND VERTICAL INFORMATION HAS BEEN SHOWN PER A TOPOGRAPHIC SURVEY DATED 03/11/2024 PREPARED BY CROSSROAD ENGINEERG, P.C.; THEREFORE, CIVIL SITE GROUP, INC. CANNOT BE HELD RESPONSIBLE IF ACTUAL HORIZONTAL AND VERTICAL DATA IS DIFFERENT FROM THAT SHOWN ON THESE PLANS. CONTRACTOR IS RESPONSIBLE FOR FIELD VERIFICATION OF ALL EXISTING CONDITIONS PRIOR TO COMMENCING WITH CONSTRUCTION.

LEGEND:

- R/W — PROPERTY BOUNDARY OR R/W (REFER TO ALTA/NSPS SURVEY)
- PROPOSED STORM SEWER
- PROPOSED SUB-SURFACE ROOF DRAIN
- PROPOSED STORM STRUCTURE
- STM — EX. UNDERGROUND STORM SEWER LINE
- 861 — PROPOSED CONTOUR
- 860 — EXISTING CONTOUR
- PROPOSED DRAINAGE SWALE
- APPROX. CONSTRUCTION LIMITS
- Check Dam/Sediment Filter – Pond Outlet Protection & Existing Road Culverts (Rock Check Dam). SEE DETAIL 04/C4.1
- SF — PROPOSED SILT FENCE–Typical in all areas where sediment could leave the site. SEE DETAIL 06/C4.1
- PERMANENT SEEDING WITH STRAW MULCH – TYPICAL AFTER FINAL GRADING IS COMPLETED.
- EB — PROPOSED EROSION CONTROL BLANKET SEE DETAIL 05/C4.1
- TS — TEMPORARY SEEDING WITH STRAW MULCH – TYPICAL WHERE CONSTRUCTION ACTIVITIES WILL REMAIN IDLE FOR A PERIOD OF 10 DAYS OR MORE.
- Point where stormwater will leave the site.
- Inlet Protection FlexStorm Baskets to be utilized in paved areas. SEE DETAIL ON SHEET C4.1
- PROPOSED TEMPORARY CONSTRUCTION ENTRANCE SEE DETAIL 03/C4.1

NOTE: INSTALL TEMPORARY SEEDING AFTER A SPECIFIC STAGE OF CONSTRUCTION HAS BEEN COMPLETED (TEMPORARY OR FINAL) WHERE AREAS WILL BE IDLE OF CONSTRUCTION ACTIVITIES FOR A PERIOD OF 7 DAYS OR MORE.

TOWN OF MCCORDSVILLE STANDARDS

CONTRACTOR TO CONSTRUCT ALL APPLICABLE SITE IMPROVEMENTS TO THE TOWN OF McCORDSVILLE CURRENT STANDARDS PER THE ATTACHED STANDARD DETAIL SHEETS.

DEWATERING DISCHARGE

ALL DEWATERING PUMPING SHALL BE DISCHARGED INTO AN APPROVED FILTER BAG BEFORE RELEASING INTO THE EXISTING STORM SEWER SYSTEM AND/OR R/W SWALE.

GENERAL NOTES

1. CONTRACTOR TO SCHEDULE A PRE-CONSTRUCTION MEETING WITH THE TOWN OF MCCORDSVILLE AND/OR HANCOCK COUNTY SOIL & WATER CONSERVATION DISTRICT PRIOR TO COMMENCING WITH CONSTRUCTION.
2. TEMPORARY TRAFFIC CONTROL DURING CONSTRUCTION TO CONFORM TO APPLICABLE LOCAL AND STATE STANDARDS.
3. ALL CONSTRUCTION ACTIVITY ON THIS SITE TO BE PERFORMED IN COMPLIANCE WITH APPLICABLE O.S.H.A. STANDARDS FOR WORKER SAFETY.
4. IT SHALL BE THE CONTRACTORS RESPONSIBILITY TO FIELD VERIFY ALL UTILITY LOCATIONS BEFORE CONSTRUCTION BEGINS.
5. IT SHALL BE THE CONTRACTORS RESPONSIBILITY TO FIELD VERIFY ALL EXISTING ELEVATIONS BEFORE CONSTRUCTION BEGINS.

ADDITIONAL EROSION CONTROL MEASURES MAY BE REQUIRED IN THE FIELD BY THE INSPECTOR

EROSION CONTROL NOTES

1. ALL CONSTRUCTION METHODS AND MATERIALS MUST CONFORM TO CURRENT STANDARDS AND SPECIFICATIONS OF THE FEDERAL, STATE, COUNTY, CITY OR LOCAL REQUIREMENTS, WHICHEVER HAS JURISDICTION.
2. LAND ALTERATION WHICH STRIPS THE LAND OF VEGETATION, INCLUDING REGRADING, SHALL BE DONE IN A WAY THAT WILL MINIMIZE EROSION.
3. THIS PLAN SHALL NOT BE CONSIDERED ALL INCLUSIVE AS THE CONTRACTOR SHALL TAKE ALL NECESSARY PRECAUTIONS TO PREVENT SOIL SEDIMENT FROM LEAVING THE SITE. ADDITIONAL EROSION AND SEDIMENT CONTROL MEASURES WILL BE INSTALLED IF DEEMED NECESSARY BY ON-SITE INSPECTION.
4. SEDIMENT LADEN WATER SHALL BE DETAINED BY EROSION CONTROL PRACTICES AS NEEDED TO MINIMIZE SEDIMENTATION IN THE RECEIVING STREAM. NO STORM WATER SHALL BE DISCHARGED FROM THE SITE IN A MANNER THAT CAUSES EROSION AT THE POINT OF DISCHARGE.
5. WASTES AND UNUSED BUILDING MATERIALS SHALL NOT BE ALLOWED TO BE CARRIED FROM THE SITE BY STORMWATER RUNOFF. PROPER DISPOSAL OF ALL WASTES AND UNUSED BUILDING MATERIALS IS REQUIRED.
6. SEDIMENT BEING TRACED ONTO PUBLIC OR PRIVATE ROADWAYS SHALL BE MINIMIZED. CLEARING OF ACCUMULATED SEDIMENT SHALL NOT INCLUDE FLUSHING WITH WATER. CLEARED SEDIMENT SHALL BE RETURNED TO THE SITE FOR DISPOSAL.
7. SOIL WHICH HAS ACCUMULATED NEXT TO EROSION CONTROL DEVICES SHALL BE COLLECTED AND REDISTRIBUTED ON SITE AFTER EACH RAINFALL EVENT, AND AT LEAST ONCE A WEEK.
8. IF INSTALLATION OF STORM DRAINAGE SYSTEM SHOULD BE INTERRUPTED BY WEATHER OR NIGHTFALL, THE PIPE ENDS SHALL BE COVERED WITH FILTER FABRIC.
9. ALL EXISTING STRUCTURES, FENCING, TREES AND ETC., WITHIN CONSTRUCTION AREA SHALL BE REMOVED AND DISPOSED OF OFF SITE. BURNING IS NOT ALLOWED ON-SITE.
10. SCHEDULE OF EARTHWORK ACTIVITIES:
    a) THE DURATION OF TIME WHICH AN AREA REMAINS EXPOSED SHALL BE KEPT TO A PRACTICAL MINIMUM. THE AREA SHALL BE STABILIZED SOON AS POSSIBLE. TEMPORARY VEGETATION OR MULCHING SHALL BE USED TO PROTECT EXPOSED AREAS IF PERMANENT VEGETATION CANNOT BE SEEDED WITHIN 14 DAYS OR ACTIVITY CEASES FOR MORE THAN 21 DAYS OR AS DIRECTED BY THE ENGINEER.
    b) TOPSOIL REPLACEMENT SHALL TAKE PLACE FROM MARCH 1 TO OCTOBER 31. STOCKPILE TOPSOIL AT ALL OTHER TIME OF THE YEAR. PERMANENT AND FINAL VEGETATION AND STRUCTURAL EROSION CONTROL DEVICES SHALL BE INSTALLED WITHIN SEVEN (7) DAYS AFTER FINAL GRADING OR AS SOON AS POSSIBLE.

MULCHING NOTE

WHERE REQUIRED, CRIMPED/ANCHORED MULCH OR MULCH WITH A TACKING AGENT SHALL BE USED. THE APPLICATION RATE SHOULD MEET GUIDELINES PER PRACTICE 3.15 OF THE INDIANA HANDBOOK FOR EROSION CONTROL IN DEVELOPING AREAS.

STREET EROSION NOTE

THERE SHALL BE NO DIRT, DEBRIS, OR STORAGE OF MATERIALS IN THE SURROUNDING STREETS DURING THE CONSTRUCTION PROCESS.

EROSION CONTROL CONTACT

DAVE CRAVENS
BDC REALTY GROUP, LLC
6274 SOUTH FOX CHASE
PENDLETON, INDIANA 46064
(765) 635-5559

BDC REALTY GROUP, LLC
6274 S FOX CHASE
PENDLETON, IN 46064

CIVIL SITE GROUP, INC.
718 Adams Street, Suite E
Carmel, Indiana 46032
Ph: (317) 810-1677
CivilSite GROUP, INC.

PRELIMINARY
NOT FOR CONSTRUCTION
BRIAN S CROUCH
REGISTERED
No. P-19100054
STATE OF INDIANA
PROFESSIONAL ENGINEER

DATE: 06/06/2025

DWN BY:	BSC
CHKD. BY:	BSC
SCALE:	1" = 30'
DATE:	06/06/25

THE SHOPS at BROOKSIDE - BLOCK A
CR 600 W
McCORDSVILLE, IN 46055

STORMWATER POLLUTION PREVENTION PLAN
PHASE II - SOUTH BUILDING

PROJECT NUMBER
BRG.007

DRAWING NUMBER
C4.0
SHEET 5 OF 24

FERTILIZER NOTE

DO NOT USE PHOSPHOROUS CONTAINING FERTILIZERS UNLESS SOIL TESTS SHOW A PHOSPHOROUS DEFICIENCY.

SEEDBED PREPARATION

APPLY LIME TO RAISE THE pH TO THE LEVEL NEEDED FOR SPECIES BEING SEEDED. APPLY 23 POUNDS OF 12–12–12 ANALYSIS FERTILIZER (OR EQUIVALENT) PER 1000 SQ. FT. (APPROXIMATELY 1000 POUNDS PER ACRE) OR FERTILIZE ACCORDING TO TEST. APPLICATION OF 150 LBS. OF AMMONIUM NITRATE ON AREAS LOW IN ORGANIC MATTER AND FERTILITY WILL GREATLY ENHANCE VEGETATIVE GROWTH.

WORK THE FERTILIZER AND LIME INTO THE SOIL TO A DEPTH OF 2–3 INCHES WITH A HARROW, DISK OR RAKE OPERATED ACROSS THE SLOPE AS MUCH AS POSSIBLE.

SEEDING

SELECT A SEED MIXTURE BASED ON PROJECTED USE OF THE AREA (SEE PERMANENT SEED MIXTURE CHART). WHILE CONSIDERING BEST SEEDING DATES. IF PERMANENT SEEDING IS NOT PERMITTED USE TEMPORARY SEEDING UNTIL PERMANENT SEEDING CAN BE APPLIED. IF TOLERANCES ARE A PROBLEM, SUCH AS SALT TOLERANCE OF SEEDINGS ADJACENT TO STREETS AND HIGHWAYS, SEE SEED TOLERANCE CHART.

	SOIL CONDITION			SHADE TOLERANCE	CLOSE MOWING TO 2–3 1/2 INCHES	TRAMPING TOLERANCE	FERTILITY NEEDS	WINTER HARDINESS	FLOODING TOLERANCE (DAYS)	MATURE HEIGHT (INCHES)	EMERGENCE TIME (DAYS)	SOIL TOLERANCE		
	WET	NORM	DRY									GEN.	SOIL	SPRAY
CREEPING RED FESCUE FESTUCA RUBRA	2	1	2	1	1	1	MED.	1	20–25	12–18	7–21			S
KENTUCKY BLUEGRASS POA PROTINSIS	2	1	2	1	1	1	MED.	1	20–35	12–18	10–20			MT
TALL FESCUE FESTUCA L. ARUNDINACEA	2	1	1	1	1	1	LOW	1	24–35	24–36	5–14		T	
PERENNIAL RYEGRASS LOLLUM PERENNE	2	1	2	–	1	2	MED. HIGH	2	15–20	12–18	5–10		MT	
CROWNVETCH CORONILLA VARLA	–	1	1	2	–	–	LOW	1	5–10	24	14–21	T		
RED CLOVER TRIFOLIUM PROTENSE	–	1	–	2	–	–	MED.	1	7–10	18	5–10	S	S	

RANKING:
1 GOOD
2 MEDIUM
– NOT TOLERANT

SALT TOLERANCE (TO BOTH SOIL SALTS & SPRAY)
T TOLERANCE
MT MEDIUM TOLERANCE
S SLIGHT TOLERANCE

FERTILIZER NOTE

DO NOT USE PHOSPHOROUS CONTAINING FERTILIZERS UNLESS SOIL TESTS SHOW A PHOSPHOROUS DEFICIENCY.

SPECIES	SEEDING RATE LBS/ACRE	SEEDING RATE LBS/1000 SQ. FT.	SUITABLE pH	SITE SUITABILITY* DROUGHTY	SITE SUITABILITY* WELL DRAINED	SITE SUITABILITY* WET
LEVEL AND SLOPING, OPEN AREAS						
1. TALL FESCUE	35	.8	5.5–8.3	2	1	2
2. TALL FESCUE	25	.6	5.5–8.3		1	
RED CLOVER	5	.12				
3. KENTUCKY BLUEGRASS	15	.4	5.8–7.5	2	1	
CREEPING RED FESCUE	15	.4				
STEEP BANKS AND CUTS						
4. TALL FESCUE	15	.4	5.8–7.5	2	1	2
KENTUCKY BLUEGRASS	25	.6				
5. TALL FESCUE	35	.8	5.5–8.3	2	1	
EMERALD CROWNVETCH**	10	.25				
LAWNS AND HIGH MAINTENANCE AREAS						
6. KENTUCKY BLUEGRASS	40	.9	5.8–7.5	2	1	
CREEPING RED FESCUE	40	.9				
7. PERENNIAL RYEGRASS	170	4.0	5.0–7.5		1	
(TURF TYPE)						
8. TALL FESCUE	170	4.0	5.5–8.3	2	1	2

* 1 – PREFERRED 2 – WILL TOLERATE ** INOCULATE WITH SPECIFIC INOCULANT.

SEED TOLERANCE CHART

SEEDING DETAIL

REVISION RECORD

REV	DATE	DESCRIPTION	DES BY	APP BY

TEMPORARY SEEDING DATES

	JAN	FEB	MAR	APR	MAY	JUN	JUL	AUG	SEP	OCT	NOV	DEC
WHEAT OR RYE												
OATS												
ANNUAL RYEGRASS												

PERMANENT SEEDING DATES

	JAN	FEB	MAR	APR	MAY	JUN	JUL	AUG	SEP	OCT	NOV	DEC
NON–IRRIGATED*												
IRRIGATED												
DORMANT SEEDING **												

IRRIGATION NEEDED DURING THIS PERIOD. TO CONTROL EROSION AT TIMES OTHER THAN IN THE SHADED AREAS. USE MULCH.

* LATE SUMMER SEEDING DATES MAY BE EXTENDED 5 DAYS IF MULCH IS APPLIED.

** INCREASE SEEDING APPLICATION BY 50%.

TEMPORARY SEEDINGS

TYPE OF SEED	1000 SQ. FT.	ACRE	REMARKS
WHEAT OR RYE	3.5 LBS.	2 BU.	COVER SEED 1" TO 1 1/2" DEEP
SPRING OATS	2.3 LBS.	3 BU.	COVER SEED 1" DEEP
ANNUAL RYEGRASS	1 LB.	40 LB.	COVER SEED 1/4" DEEP

* NOT NECESSARY WHERE MULCH IS APPLIED.

FLEXSTORM CATCH–IT FILTERS FOR TEMPORARY INLET PROTECTION
PRODUCT SELECTION AND SPECIFICATION DRAWING

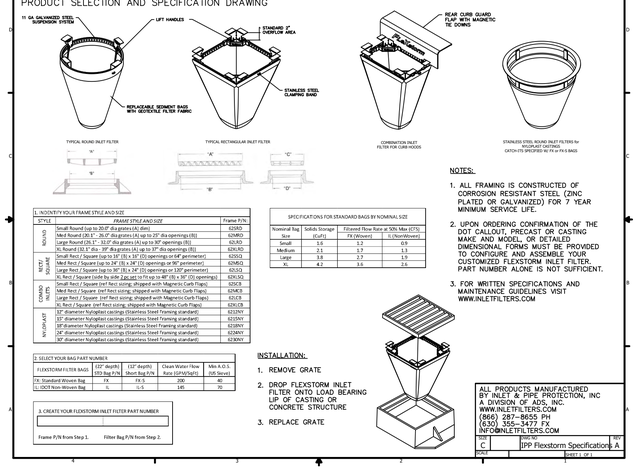

1. I-NDENTFY YOUR FRAME STYLE AND SIZE			Frame P/N
STYLE		FRAME STYLE AND SIZE	
ROUND	Small	Small Round (up to 20.0" dia grates (A) dim)	62MD
	Med	Med Round (20.1" - 26.0" dia grates (A) up to 25" dia openings (B))	62MD
	Large	Large Round (26.1" - 31.0" dia grates (A) up to 30" openings (B))	62LRD
	XL	XL Round (31.1" dia grates (A) up to 35" dia openings (B))	62XLRD
WIDE SQUARE	Small	Small Rect / Square (up to 16" (X) x 16" (Y)) openings or 64" perimeter)	62SQ
	Med	Med Rect / Square (up to 24" (X) x 24" (Y) openings or 96" perimeter)	62MSQ
	Large	Large Rect / Square (up to 30" (X) x 24" (Y)) openings or 108" perimeter)	62LSQ
	XL	XL Rect / Square (wide by wide (Lg sq) to fit up to 48" (X) x 30" (Y) openings)	62XLSQ
COMBO INLETS	Small	Small Rect / Square (not Rect) sizing, shipped with Magnetic Curb Flaps)	62SMCF
	Med	Med Rect / Square (not Rect) sizing, shipped with Magnetic Curb Flaps)	62MMCF
	Large	Large Rect / Square (not Rect) sizing, shipped with Magnetic Curb Flaps)	62LMCF
	XL	XL Rect / Square (not Rect) sizing, shipped with Magnetic Curb Flaps)	62XLCF
MOUNTLAIT		15" diameter Nyloplast castings (Stainless Steel Framing standard)	62STMY
		18" diameter Nyloplast castings (Stainless Steel Framing standard)	62STMY
		24" diameter Nyloplast castings (Stainless Steel Framing standard)	62STMY
		30" diameter Nyloplast castings (Stainless Steel Framing standard)	62SMMY
		36" diameter Nyloplast castings (Stainless Steel Framing standard)	62SMMY

SPECIFICATIONS FOR STANDARD BAGS BY NOMINAL SIZE			
Nominal Bag Size	Solids Storage (Cu Ft)	Filtrated Flow Rate at 50% Max (CFS) FR (Woven)	FR (Non-Woven)
Small	3.8	1.2	0.9
Medium	2.1	1.7	1.3
Large	3.8	2.7	1.9
XL	4.2	3.6	2.5

2. SELECT YOUR BAG PART NUMBER					
FLEXSTORM FILTER BAGS	(12" depth) 100 Bag P/N	(12" depth) 50 Bag P/N	Clean Water Flow Rate (GPM/bag)	Min. A.O.S. (US Sieve)	
FX: Standard Woven Bag	FX	FX-S	200	40	
LL: LOOP Non-Woven Bag	L	L-S	145	70	

3. CREATE YOUR FLEXSTORM INLET FILTER PART NUMBER	
Frame P/N from Step 1.	Filter Bag P/N from Step 2.

NOTES:
1. ALL FRAMING IS CONSTRUCTED OF CORROSION RESISTANT STEEL (ZINC PLATED OR GALVANIZED) FOR 7 YEAR MINIMUM SERVICE LIFE.
2. UPON ORDERING CONFIRMATION OF THE DOT CALLOUT, PRECAST OR CASTING MAKE AND MODEL, OR DETAILED DIMENSIONAL FORMS MUST BE PROVIDED TO CONFIGURE AND ASSEMBLE YOUR CUSTOMIZED FLEXSTORM INLET FILTER. PART NUMBER ALONE IS NOT SUFFICIENT.
3. FOR WRITTEN SPECIFICATIONS AND MAINTENANCE GUIDELINES VISIT WWW.INLETFILTERS.COM

INSTALLATION:
1. REMOVE GRATE
2. DROP FLEXSTORM INLET FILTER ONTO LOAD BEARING LIP OF CASTING OR CONCRETE STRUCTURE
3. REPLACE GRATE

ALL PRODUCTS MANUFACTURED BY INLET & PIPE PROTECTION, INC A DIVISION OF ADS, INC.
WWW.INLETFILTERS.COM
(866) 287–8665 PH
(630) 355–3477 FX
INFO@INLETFILTERS.COM

C		IPP Flexstorm Specifications A	
PRINT		SHEET (.DWG)	

DANDY BAG®

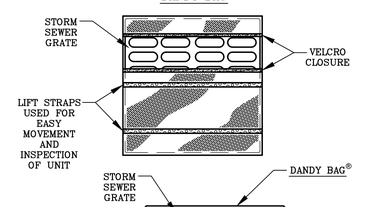

DANDY BAG® SPECIFICATIONS

NOTE: THE DANDY BAG® WILL BE **MANUFACTURED IN THE U.S.A.** FROM A WOVEN MONOFILAMENT FABRIC THAT MEETS OR EXCEEDS THE FOLLOWING SPECIFICATIONS:

HI–FLOW DANDY BAG® (SAFETY ORANGE)

Mechanical Properties	Test Method	Units	MARV
Grab Tensile Strength	ASTM D 4632	kN (lbs)	1.62 (365) X 0.89 (200)
Grab Tensile Elongation	ASTM D 4632	%	24 X 10
Puncture Strength	ASTM D 4833	kN (lbs)	0.40 (90)
Mullen Burst Strength	ASTM D 3786	kPa (psi)	3097 (450)
Trapezoid Tear Strength	ASTM D 4533	kN (lbs)	0.51 (115) X 0.33 (75)
UV Resistance	ASTM D 4355	%	90
Apparent Opening Size	ASTM D 4751	Mm (US Std Sieve)	0.425 (40)
Flow Rate	ASTM D 4491	l/min/m² (gpl/min/ft²)	5907 (145)
Permittivity	ASTM D 4491	Sec⁻¹	2.1

*Note: All Dandy Bags® can be ordered with our optional oil absorbent pillows

01 C-4.1 STORM INLET BAG PROTECTION
NOT TO SCALE

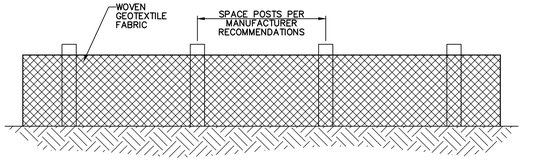

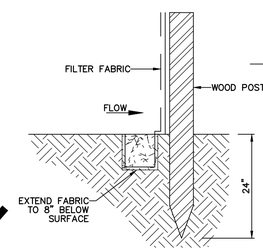

1. PLACE THE END POST OF THE SECOND FENCE INSIDE THE END POST OF THE FIRST FENCE.
2. ROTATE BOTH POSTS AT LEAST 180° IN A CLOCKWISE DIRECTION TO CREATE A TIGHT SEAL WITH THE FABRIC MATERIAL.
3. DRIVE BOTH POSTS A MINIMUM OF 18" INTO THE GROUND AND BURY THE FLAP.

JOINT DETAIL

NOTE:
POSTS SHALL HAVE A MINIMUM LENGTH OF 36 INCHES PLUS BURIAL DEPTH. POST MATERIAL SHALL BE WOOD, STEEL, OR SYNTHETIC, AND SHALL BE OF SUFFICIENT STRENGTH TO RESIST DAMAGE DURING INSTALLATION AND TO SUPPORT APPLIED LOADS.

FABRIC SHALL BE A WOVEN GEOTEXTILE FABRIC CONSISTING OF STRONG, ROT RESISTANT, MATERIALS RESISTANT TO DETERIORATION FROM ULTRAVIOLET AND HEAT EXPOSURE.

06 C4.1 SILT FENCE CONSTRUCTION
NOT TO SCALE

NORTH AMERICAN GREEN

TYPE	LONGEVITY	MAX. SLOPE	APPLICATION
S75	10 MONTHS	3:1	LOW FLOW SWALES
DS75	60 DAYS	3:1	LOW FLOW SWALES
S150	10 MONTHS	2:1	MODERATE DISCHARGE SWALES
DS150	60 DAYS	2:1	MODERATE DISCHARGE SWALES
SC150	2 YEARS	1:1	MEDIUM DISCHARGE SWALES
C125	3 YEARS	>1:1	HIGH DISCHARGE SWALES

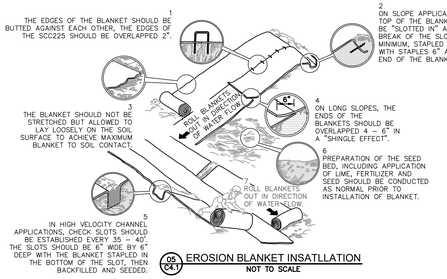

08 C4.1 EROSION BLANKET INSATLLATION
NOT TO SCALE

EROSION CONTROL SCHEDULE

EROSION CONTROL MEASURE	MAINTENANCE	INSTALLATION SEQUENCE
STONE ENTRANCE	AS NEEDED	PRIOR TO CLEARING AND GRADING
SILT FENCE	WEEKLY, AFTER STORM EVENTS AND AS NEEDED	PRIOR TO CLEARING AND GRADING
EXISTING INLET PROTECTION	WEEKLY, AFTER STORM EVENTS AND AS NEEDED	PRIOR TO CLEARING AND GRADING
TREE PROTECTION	WEEKLY, AFTER STORM EVENTS AND AS NEEDED	PRIOR TO CLEARING AND GRADING
TEMPORARY DIVERSIONS	WEEKLY, AFTER STORM EVENTS AND AS NEEDED	ALONG WITH ROUGH GRADING
TEMPORARY SEEDING	WATER AS NEEDED	AFTER ROUGH GRADING
PERMANENT SEEDING	WATER AS NEEDED	AFTER FINISH GRADING – AS SOON AS PRACTICAL UPON COMPLETION
EROSION CONTROL MATTING	WEEKLY, AFTER STORM EVENTS AND AS NEEDED	AFTER FINISH GRADING – AS SOON AS PRACTICAL UPON COMPLETION
ROCK CHECK DAM	WEEKLY, AFTER STORM EVENTS AND AS NEEDED	AFTER FINISH GRADING – AS SOON AS PRACTICAL UPON COMPLETION
INLET PROTECTION	WEEKLY, AFTER STORM EVENTS AND AS NEEDED	AFTER EACH INLET IS PLACED
REMOVAL OF TREE PROTECTION	N/A	AFTER PERMANENT SEEDING
REMOVAL OF STRAW BALES	N/A	AFTER ALL AREAS DRAINING TO THESE AREAS ARE STABILIZED
REMOVAL OF INLET PROTECTION	N/A	AFTER ALL AREAS DRAINING TO THESE AREAS ARE STABILIZED
REMOVAL OF SILT FENCE	N/A	AFTER ALL AREAS DRAINING TO THESE AREAS ARE STABILIZED

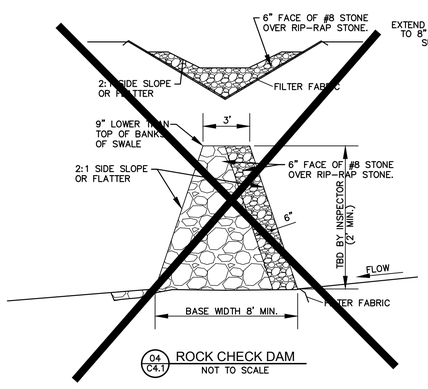

04 C4.1 ROCK CHECK DAM
NOT TO SCALE

EROSION CONTROL CONTACT

DAVE CRAVENS
BDC REALTY GROUP, LLC
6274 SOUTH FOX CHASE
PENDLETON, INDIANA 46064
(765) 635-5559

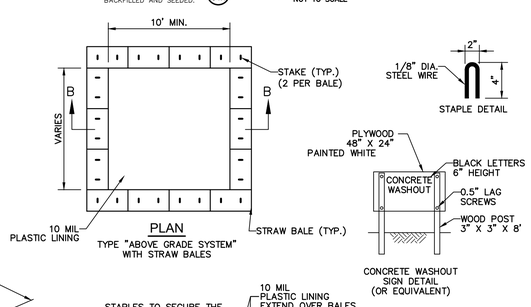

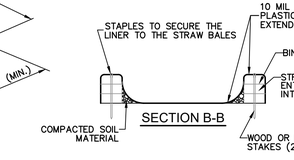

NOTES:
1. ACTUAL LAYOUT DETERMINED IN FIELD.
2. THE CONCRETE WASHOUT SIGN SHALL BE INSTALLED WITHIN 30 FT. OF THE TEMPORARY CONCRETE WASHOUT FACILITY.

07 C4.1 CONCRETE WASHOUT BMP
NOT TO SCALE

EROSION CONTROL MEASURES MAINTENANCE REQUIREMENTS

EROSION CONTROL BLANKET (SURFACE APPLIED) MAINTENANCE REQUIREMENTS:

1. DURING VEGETATIVE ESTABLISHMENT, INSPECT AFTER STORM EVENTS FOR ANY EROSION BELOW THE BLANKET.
2. IF ANY AREA SHOWS EROSION, PULL BACK THAT PORTION OF THE BLANKET COVERING IT, ADD SOIL, RE–SEED THE AREA, AND RE–LAY AND STAPLE THE BLANKET.
3. AFTER VEGETATIVE ESTABLISHMENT, CHECK THE TREATED AREA PERIODICALLY.

TEMPORARY GRAVEL CONSTRUCTION ENTRANCE MAINTENANCE REQUIREMENTS:

1. INSPECT ENTRANCE PAD AND SEDIMENT DISPOSAL AREA WEEKLY AND AFTER STORM EVENTS OR HEAVY USE.
2. RESHAPE PAD AS NEEDED FOR DRAINAGE AND RUNOFF CONTROL.
3. TOP DRESS WITH CLEAN STONE AS NEEDED.
4. IMMEDIATELY REMOVE MUD AND SEDIMENT TRACKED OR WASHED ONTO PUBLIC ROADS BY BRUSHING OR SWEEPING. FLUSHING SHOULD ONLY BE USED IF THE WATER IS CONVEYED INTO A SEDIMENT TRAP OR BASIN.
5. REPAIR ANY BROKEN ROAD PAVEMENT IMMEDIATELY.

ROCK CHECK DAM MAINTENANCE REQUIREMENTS:

1. INSPECT ROCK CHECK DAMS AFTER EACH STORM EVENT AND PROMPTLY REMOVE ANY SEDIMENT DEPOSITS TO ENSURE ADEQUATE STORAGE VOLUME FOR THE NEXT RAIN, TAKING CARE NOT TO UNDERMINE THE ENTRENCHED BALES.
2. INSPECT PERIODICALLY FOR DETERIORATION OR DAMAGE FROM CONSTRUCTION ACTIVITIES AND REPAIR IMMEDIATELY.
3. AFTER THE CONTRIBUTING DRAINAGE AREA HAS BEEN STABILIZED, REMOVE ALL ROCK CHECK DAMS AND SEDIMENT, BRING THE DISTURBED AREA TO GRADE, AND STABILIZE IT.

SILT FENCE MAINTENANCE REQUIREMENTS:

1. INSPECT THE SILT FENCE PERIODICALLY AND AFTER EACH STORM EVENT.
2. IF FENCE FABRIC TEARS, STARTS TO DECOMPOSE, OR IN ANY WAY BECOMES INEFFECTIVE, REPLACE THE AFFECTED PORTION IMMEDIATELY.
3. REMOVE DEPOSITED SEDIMENT WHEN IT REACHES HALF THE HEIGHT OF THE FENCE AT ITS LOWEST POINT OR IS CAUSING THE FABRIC TO BULGE.
4. TAKE CARE TO AVOID UNDERMINING THE FENCE DURING CLEAN OUT.
5. AFTER THE CONTRIBUTING DRAINAGE AREA HAS BEEN STABILIZED, REMOVE THE FENCE AND SEDIMENT DEPOSITS, BRING THE DISTURBED AREA TO GRADE, AND STABILIZE.

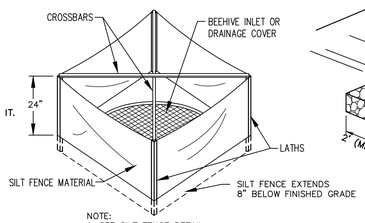

NOTE:
1. SEE SILT FENCE DETAIL FOR MATERIAL SPECIFICATIONS.
2. SILT FENCE SHALL BE PREASSEMBLED BY SUPPLIER.

02 C4.1 SILT FENCE INLET PROTECTION
NOT TO SCALE

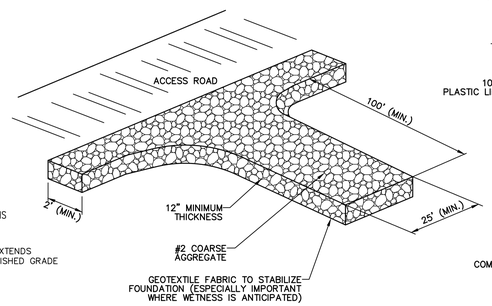

03 C4.1 TEMPORARY CONSTRUCTION ENTRANCE
NOT TO SCALE

BDC REALTY GROUP, LLC
6274 S FOX CHASE
PENDLETON, IN 46064

CIVIL SITE GROUP, INC.
CivilSite GROUP, INC.
718 Adams Street, Suite E
Carmel, Indiana 46032
Ph: (317) 810–1677

PRELIMINARY NOT FOR CONSTRUCTION
BRIAN S CROWE REGISTERED PROFESSIONAL ENGINEER
DATE: 06/06/2025

DWN BY:	BSC
CHKD. BY:	BSC
SCALE:	N/A
DATE:	06/06/25

SHOPPES at BROOKSIDE - BLOCK A
CR 600 W
McCORDSVILLE, IN 46055

STORMWATER POLLUTION PREVENTION DETAILS
PHASE II - SOUTH BUILDING

PROJECT NUMBER
BRG.007

DRAWING NUMBER
C4.1
SHEET 6 OF 24

(A1) INDEX OF THE LOCATION OF REQUIRED PLAN ELEMENTS IN THE CONSTRUCTION PLAN:

This sheet C4.2 serves as the index of all of the information required by this section.

(A2) A VICINITY MAP DEPICTING THE PROJECT SITE LOCATION IN RELATIONSHIP TO MAJOR ROADS:

The vicinity map depicting the project site location can be found on sheet C0.0.

(A3) NARRATIVE OF THE NATURE & PURPOSE OF THE PROJECT:

This project is located on the west side of Mount Comfort Road (CR N 600 W) approximately 700 feet south of CR W 900 N. The property lies within the existing Village at Brooside commercial PUD in Hancock County, Town of McCordsville, Indiana. The subject site currently consists of a single lot that totals 5.96 +/– acres (excludes right–of–way area). The proposed improvements will consist of constructing a new 10,200 sf +/– retail/commercial tenant building, surface parking, drainage, utilities, and landscaping. The approximate limits of disturbance for this project is 1.7 +/– acres, including off–site utility connections. The subject site is currently vacant with some landscape berms on the west and south perimeters

(A4) LATITUDE & LONGITUDE:

Longitude W –85.919518 / Latitude N 39.911210

(A5) LEGAL DESCRIPTION OF THE PROJECT SITE:

The legal description can be found on sheets C0.0 & the Survey.

(A6) 11x17-INCH PLAT SHOWING THE BUILDING LOT NUMBERS/BOUNDARIES & ROAD LAYOUT/NAMES:

These construction plans can be printed at 11x17 size and will be legible.

(A7) BOUNDARIES OF THE 100-HUNDRED (100) YEAR FLOODPLAINS, FLOODWAY FRINGES & FLOODWAYS:

The subject site lies outside of the FEMA flood plain. FIRM Map information can be found on sheets C3.0 & C4.0.

(A8) LAND USE OF ADJACENT PROPERTIES:

North: Commercial / South: Residential
East: Commercial / West: Residential

(A9) IDENTIFICATION OF A U.S. EPA APPROVED OR ESTABLISHED TMDL:

North Fork Dry Branch is currently established as a Category 2, not limpaired waterway, and is not on the current 303(d) list of impaired waters.

(A10) NAMES OF RECEIVING WATERS:

Stormwater runoff from the subject site will be collected in an an on–site storm sewer system and routed to an existing detention system. The site ultimately discharges into North Fork Dry Branch to Geist Reservoir.

(A11) IDENTIFICATION OF DISCHARGES TO A WATER ON THE CURRENT 303(d) LIST OF IMPAIRED WATERS:

Stormwater runoff from the subject site will be collected in an an on–site storm sewer system and routed to an existing detention system. North Fork Dry Branch is not listed on IDEMs current 303(d) list of impaired waters.

(A12) SOILS MAP OF THE PREDOMINANT SOIL TYPES:

A soils map with soil properties, characteristics, limitations and hazards can be found on sheet C4.0.

(A13) LOCATION OF ALL KNOWN WETLANDS, LAKES & WATER COURSES ON OR ADJACENT TO THE PROJECT SITE:

There are no wetlands, lakes or water courses on or adjacent to the subject site. North Fork Dry Branch is located adjacent northwest of the subject site.

(A14) IDENTIFICATION OF ANY OTHER STATE OR FEDERAL WATER QUALITY PERMITS REQUIRED FOR CONSTRUCTION:

Outside of the standard Indiana Construction Stormwater General Permit (CSGP), there are not any additional state or federal water quality permits required for this project.

(A15) IDENTIFICATION & DELINEATION OF EXISTING COVER, INCLUDING NATURAL BUFFERS:

The subject site currently consists of grass/weed cover from previous construction land disturbance.

(A16) EXISTING SITE TOPOGRAPHY AT AN INTERVAL APPROPRIATE TO INDICATE DRAINAGE PATTERNS:

Existing and proposed conditions topography can be found on sheets C3.0 & Survey.

(A17) LOCATION(S) WHERE RUNOFF ENTERS THE PROJECT SITE:

CR N 600 W drains onto the subject site in the existing conditions. Existing conditions can be found on the Existing Conditions Survey.

(A18) LOCATION(S) WHERE RUNOFF DISCHARGES FROM THE PROJECT SITE PRIOR TO LAND DISTURBANCE:

The subject site currently consists of grass/weed cover from previous construction land disturbance. The site drains from east to west, collected in an on–site storm sewer system and routed to an existing detention system. Existing conditions can be found on the Existing Conditions Survey.

(A19) LOCATION OF ALL EXISTING STRUCTURES ON THE PROJECT SITE:

There are no existing structures on the subject site. Existing conditions can be found on the Existing Conditions Survey.

(A20) EXISTING PERMANENT RETENTION OR DETENTION FACILITIES:

There is NO existing permanent detention facility on the subject site. An existing detention facility is located west of the subject property. Existing conditions can be found on the Existing Conditions Survey.

(A21) LOCATIONS WHERE STORMWATER MAY BE DIRECTLY DISCHARGED INTO GROUNDWATER:

The subject site currently consists of grass/weed cover from previous construction land disturbance. The site drains from east to west, collected in an on–site storm sewer system and routed to an existing detention system. Existing conditions can be found on the Existing Conditions Survey.

(A22) SIZE OF THE PROJECT EXPRESSED IN ACRES:

The overall subject site is 5.69+/– acres in size; however, the proposed improvements, including utility connections, will be disturbing approximately 1.7+/– acres.

(A23) TOTAL EXPECTED LAND DISTURBANCE:

The overall subject site is 5.69+/– acres in size; however, the proposed improvements, including utility connections, will be disturbing approximately 1.7+/– acres.

(A24) PROPOSED FINAL TOPOGRAPHY:

The location of all proposed site improvements, including final topography, roads, utilities, lot delineation, proposed structures, and common areas can be found on sheets C2.0, C3.0, C5.0, and L1.0.

(A25) LOCATIONS & APPROXIMATE BOUNDARIES OF ALL DISTURBED AREAS:

The location and approximate boundaries of all disturbed areas can be found on sheets C3.0 & C4.0.

(A26) LOCATIONS, SIZE & DIMENSIONS OF THE STORMWATER DRAINAGE SYSTEM:

The details of the proposed stormwater drainage system can be found on sheets C3.0, C5.0, and C7.3.

(A27) LOCATIONS OF SPECIFIC POINTS WHERE STORMWATER DISCHARGES WILL LEAVE THE SITE:

The details of the proposed stormwater drainage system can be found on sheets C3.0, C5.0, and C7.3.

(A28) LOCATION OF ALL PROPOSED SITE IMPROVEMENTS:

The location of all proposed site improvements, including final topography, roads, utilities, lot delineation, proposed structures, and common areas can be found on sheets C2.0, C3.0, C5.0, and L1.0.

(A29) LOCATION OF ALL SOIL STOCKPILES & BORROW AREAS:

A soils stockpile is not anticipated for the construction of this project.

(A30) CONSTRUCTION SUPPORT ACTIVITIES THAT ARE EXPECTED TO BE PART OF THE PROJECT:

No construction support activities are anticipated for the construction of this project other than deliveries of materials (i.e. quarry rock, utility pipe, concrete, asphalt).

(A31) LOCATION OF ANY IN-STREAM ACTIVITIES THAT ARE PLANNED FOR THE PROJECT:

There are no in stream activities planned for this project.

(B1) DESCRIPTION OF THE POTENTIAL POLLUTANT GENERATING SOURCES & POOLUTANTS:

Potential pollutants sources relative to a construction site may include, but are not limited to material and fuel storage areas, fueling locations, exposed soils and leaking vehicle/equipment. Potential pollutants that may appear at the site due to construction activities include, but are not limited to diesel fuel, gasoline, concrete and concrete washout, solid waste, sediment, paint and solvents, equipment repair products, anti–freeze and fertilizer.

(B2) STABLE CONSTRUCTION ENTRANCE LOCATIONS & SPECIFICATIONS:

The location, details and specifications of the construction entrance can be found on sheets C4.0 and C4.1

(B3) SPECIFICATIONS FOR TEMPORARY & PERMANENT STABILIZATION:

The location, details and specifications of all temporary and permanent erosion control measures can be found on sheets C4.0 and C4.1.

(B4) SEDIMENT CONTROL MEASURES FOR CONCENTRATED FLOW AREAS:

The location, details and specifications of all sediment control measures for concentrated flow areas can be found on sheets C4.0 and C4.1.

(B5) SEDIMENT CONTROL MEASURES FOR SHEET FLOW AREAS:

The location, details and specifications of all sediment control measures for sheet flow areas can be found on sheets C4.0 and C4.1.

(B6) RUN-OFF CONTROL MEASURES:

The location, details and specifications of all runoff control measures for sheet flow areas can be found on sheets C4.0 and C4.1.

(B7) STORMWATER OUTLET PROTECTION LOCATION & SPECIFICATIONS:

The location, details and specifications of stormwater outlet protection measures can be found on sheets C4.0 and C4.1.

(B8) GRADE STABILIZATION STRUCTURE LOCATIONS & SPECIFICATIONS:

We do not anticipate the need for any grade stabilization structures on this project. The location, details and specifications of other erosion control measures can be found on sheets C4.0 and C4.1.

(B9) DEWATERING APPLICATIONS & MANAGEMENT METHODS:

We do not anticipate the need for any dewatering on this project. The location, details and specifications of other erosion control measures can be found on sheets C4.0 and C4.1.

(B10) MEASURES UTILIZED FOR WORK WITHIN WATERBODIES:

We do not anticipate the need for any work within waterbodies on this project. The location, details and specifications of other erosion control measures can be found on sheets C4.0 and C4.1.

(B11) MAINTENANCE GUIDELINES FOR EACH PROPOSED STORMWATER QUALITY MEASURE:

CONCRETE WASHOUT, DUMPSTER, PORT–O–LET, AND FUEL TANKS SHOULD BE LOCATED A MINIMUM OF 50 FEET FROM STORM DRAINS, OPEN DRAINAGE FACILITIES, AND WATERCOURSES.

ROCK CHECK DAM MAINTENANCE REQUIREMENTS:
1. INSPECT ROCK CHECK DAMS AFTER EACH STORM EVENT AND PROMPTLY REMOVE ANY SEDIMENT DEPOSITS TO ENSURE ADEQUATE STORAGE VOLUME FOR THE NEXT RAIN, TAKING CARE NOT TO UNDERMINE THE ENTRENCHED BALES.
2. INSPECT PERIODICALLY FOR DETERIORATION OR DAMAGE FROM CONSTRUCTION ACTIVITIES AND REPAIR IMMEDIATELY.
3. AFTER THE CONTRIBUTING DRAINAGE AREA HAS BEEN STABILIZED, REMOVE ALL ROCK CHECK DAMS AND SEDIMENT, BRING THE DISTURBED AREA TO GRADE, AND STABILIZE IT.

SILT FENCE MAINTENANCE REQUIREMENTS:
1. INSPECT THE SILT FENCE PERIODICALLY AND AFTER EACH STORM EVENT.
2. IF FENCE FABRIC TEARS, STARTS TO DECOMPOSE, OR IN ANY WAY BECOMES INEFFECTIVE, REPLACE THE AFFECTED PORTION IMMEDIATELY.
3. REMOVE DEPOSITED SEDIMENT WHEN IT REACHES HALF THE HEIGHT OF THE FENCE AT ITS LOWEST POINT OR IS CAUSING THE FABRIC TO BULGE.
4. TAKE CARE TO AVOID UNDERMINING THE FENCE DURING CLEAN OUT.
5. AFTER THE CONTRIBUTING DRAINAGE AREA HAS BEEN STABILIZED, REMOVE THE FENCE AND SEDIMENT DEPOSITS, BRING THE DISTURBED AREA TO GRADE, AND STABILIZE.

TEMPORARY SEDIMENT TRAP MAINTENANCE REQUIREMENTS:
1. INSPECT TEMPORARY SEDIMENT TRAPS AFTER EACH STORM EVENT AND IMMEDIATELY REPAIR ANY EROSION AND PIPING HOLES.
2. REMOVE SEDIMENT WHEN IT HAS ACCUMULATED TO ONE–HALF THE DESIGN DEPTH.
3. REPLACE SPILLWAY GRAVEL FACING IF CLOGGED.
4. INSPECT VEGETATION, AND RE–SEED IF NECESSARY.
5. CHECK THE SPILLWAY DEPTH PERIODICALLY TO ENSURE A MINIMUM OF 1.5 FT. DEPTH FROM THE LOWEST POINT OF THE SETTLED EMBANKMENT TO HIGHEST POINT OF THE SPILLWAY CREST, AND FILL ANY LOW AREAS TO MAINTAIN DESIGN ELEVATION.
6. PROMPTLY REPLACE ANY DISPLACED RIPRAP, BEING CAREFUL THAT NO STONES IN THE SPILLWAY ARE ABOVE DESIGN GRADE.
7. AFTER ALL DISTURBED AREAS HAVE BEEN STABILIZED, REMOVE THE STRUCTURE AND SEDIMENT, SMOOTH THE SITE TO BLEND WITH ADJOINING AREAS, AND STABILIZE.

STORM INLET BAG PROTECTION MAINTENANCE REQUIREMENTS:
1. INSPECT FREQUENTLY FOR DAMAGE BY VEHICULAR TRAFFIC, AND REPAIR IF NECESSARY.
2. INSPECT AFTER EACH STORM EVENT.
3. REMOVE SEDIMENT, WITHOUT FLUSHING, WHEN IT REACHES HALF THE HEIGHT OF THE BARRIER.
4. DEPOSIT REMOVED SEDIMENT WHERE IT WILL NOT ENTER STORM DRAINS.

EROSION CONTROL BLANKET (SURFACE APPLIED) MAINTENANCE REQUIREMENTS:
1. DURING VEGETATIVE ESTABLISHMENT, INSPECT AFTER STORM EVENTS FOR ANY EROSION BELOW THE BLANKET.
2. IF ANY AREA SHOWS EROSION, PULL BACK THAT PORTION OF THE BLANKET COVERING IT, ADD SOIL, RE–SEED THE AREA, AND RE–LAY AND STAPLE THE BLANKET.
3. AFTER VEGETATIVE ESTABLISHMENT, CHECK THE TREATED AREA PERIODICALLY.

TEMPORARY GRAVEL CONSTRUCTION ENTRANCE MAINTENANCE REQUIREMENTS:
1. INSPECT ENTRANCE PAD AND SEDIMENT DISPOSAL AREA WEEKLY AND AFTER STORM EVENTS OR HEAVY USE.
2. RESHAPE PAD AS NEEDED FOR DRAINAGE AND RUNOFF CONTROL.
3. TOPDRESS WITH CLEAN STONE AS NEEDED.
4. IMMEDIATELY REMOVE MUD AND SEDIMENT TRACKED OR WASHED ONTO PUBLIC ROADS BY BRUSHING OR SWEEPING. FLUSHING SHOULD ONLY BE USED IF THE WATER IS CONVEYED INTO A SEDIMENT TRAP OR BASIN.
REPAIR ANY BROKEN ROAD PAVEMENT IMMEDIATELY.

EROSION CONTROL SCHEDULE

EROSION CONTROL MEASURE	* MAINTENANCE	INSTALLATION SEQUENCE
STONE ENTRANCE	AS NEEDED	PRIOR TO CLEARING AND GRADING
SILT FENCE & SILT SOCK	WEEKLY, AFTER STORM EVENTS AND AS NEEDED	PRIOR TO CLEARING AND GRADING
FLEXSTORM INLET PROTECTION	WEEKLY, AFTER STORM EVENTS AND AS NEEDED	EX. STORM STRUCTURES PRIOR TO CLEARING AND GRADING; AFTER INLET INSTALLATION
PERMANENT SEEDING	WATER AS NEEDED	AFTER FINISH GRADING
EROSION CONTROL MATTING	WEEKLY, AFTER STORM EVENTS AND AS NEEDED	AFTER FINISH GRADING
SEED, SOD & SITE LANDSCAPING	WATER AS NEEDED	AFTER FINISHED GRADING AROUND FINISHED UNITS
REMOVAL OF INLET PROTECTION	N/A	AFTER ALL AREAS DRAINING TO THESE AREAS ARE STABILIZED
REMOVAL OF SILT FENCE	N/A	AFTER ALL AREAS DRAINING TO THESE AREAS ARE STABILIZED

* – SEE CHART FOR MAINTENANCE REQUIREMENTS

(B12) PLANNED CONSTRUCTION SEQUENCE:

PRE–CONSTRUCTION:
PROVIDE TRAINED INDIVIDUAL DOCUMENTATION TO THE TOWN OF MCCORDSVILLE STORMWATER COORDINATOR.
A PRE–CONSTRUCTION MEETING WITH THE TOWN OF MCCORDSVILLE STORMWATER COORDINATOR AND THE OWNER, CONTRACTOR, AND APPOINTED TRAINED INDIVIDUAL WILL BE REQUIRED BEFORE LAND DISTURBING COMMENCES, INCLUDING INSTALLATION OF SEDIMENT AND EROSION CONTROL BMPS.

STEP # 1: POST AT THE ENTRANCE OF THE PROJECT SITE THE CONTACT INFORMATION OF THE PERSON RESPONSIBLE FOR CONSTRUCTION ACTIVITIES.

STEP # 2: CONTACT (IDEM) & THE TOWN OF MCCORDSVILLE 48 HOURS PRIOR TO STARTING CONSTRUCTION.

STEP # 3: DESIGNATE A PERSON TO BE RESPONSIBLE FOR THE SITE INSPECTIONS AFTER EACH 1/2" RAIN AND A MINIMUM OF ONCE EACH WEEK.

STEP # 4: INSTALL TEMPORARY CONSTRUCTION ENTRANCE.

STEP # 5: INSTALL EX. INLET PROTECTION, SILT FENCE & SILT SOCK ALONG THE PERIMETER OF THE SITE WHERE NOTED. BEGIN SITE EARTHWORK ACTIVITIES.

STEP # 6: COMPLETE MASS GRADING ACTIVITIES INCLUDING REMOVAL OF VEGETATION/MOUNDING ON SOUTH SIDE OF PROPERTY.

STEP # 7: INSTALL SITE STORM DRAINAGE INFRASTRUCTURE INCLUDING INLET PROTECTION MEASURES ALONG WITH SITE UTILITIES.

STEP # 8: INSTALL BUILDING & PAVEMENT & FINAL GRADE SITE.

STEP # 9: INSTALL LANDSCAPING AND FINAL SEEDING.

STEP # 10: REMOVE ALL TEMPORARY SEDIMENT CONTROL PRACTICES ONCE THE SITE IS STABILIZED.

AT FINAL STAGE OF CONSTRUCTION:
A BMP MEETING WILL BE REQUIRED WITH THE CONTRACTOR, OWNER AND/OR LESSEE, AND THE TOWN OF MCCORDSVILLE STORMWATER COORDINATOR AT THE TIME OF CERTIFICATE OF OCCUPANCY.
REQUEST FINAL INSPECTION FOR THE STORMWATER MANAGEMENT PERMIT AND TO TERMINATE THE STATE CONSTRUCTION STORMWATER GENERAL PERMIT (CSGP). SEE FINAL INSPECTION REQUIREMENTS.

(B13) PROVISIONS FOR EROSION CONTROL ON INDIVIDUAL RESIDENTIAL BUILDING LOTS:

This project is not a residential subdivision; therefore, there are no individual building lots.

(B14) MATERIAL HANDLING, SPILL PREVENTION & SPILL RESPONSE:

Expected materials that may appear at the site due to construction activities include, but are not limited to petroleum products, fertilizers, paint and solvents, and concrete. Materials shall be stored in the designated material storage area.

Spill prevention for vehicle and equipment fueling shall conform to the following practices: vehicle equipment fueling procedures and practices are designed to prevent fuel spills and leaks, and reduce or eliminate contamination of stormwater. This can be accomplished by using offsite facilities, fueling in designated areas only, enclosing or covering stored fuel, implementing spill controls, and training employees and subcontractors in proper fueling procedures. Limitations: Onsite vehicle and equipment fueling should only be used where it is impractical to send vehicles and equipment offsite for fueling. Sending vehicles and equipment offsite should be done in conjunction with a Stabilized Construction Entrance/Exit. Implementation: Use offsite fueling stations as much as possible. Discourage "topping–off" of fuel tanks. Absorbent spill cleanup materials and spill kits should be available in fueling areas and on fueling trucks, and should be disposed of properly after use. Drip pans or absorbent pads should be used during vehicle and equipment fueling, unless the fueling is performed over an impermeable surface in a dedicated fueling area. Use absorbent materials on small spills. Do not hose down or bury the spill. Remove the absorbent materials promptly and dispose of properly. Avoid mobile fueling of mobile construction equipment around the site; rather, transport the equipment to designated fueling areas. Train employees and subcontractors in proper fueling and cleanup procedures. Dedicated fueling areas should be protected from stormwater runoff, and should be located at least 50 ft away from downstream drainage facilities and watercourses. Fueling must be performed on level–grade area. Protect fueling areas with berms and dikes to prevent runoff, and to contain spills. Nozzles used in vehicle and equipment fueling should be equipped with an automatic shutoff to control drips. Fueling operations should not be left unattended. Federal, state, and local requirements should be observed for any stationary above ground storage tanks.

Vehicles and equipment should be inspected each day of use for leaks. Leaks should be repaired immediately or problem vehicles or equipment should be removed from the project site. Keep ample supplies of spill cleanup materials onsite. Immediately clean up spills and properly dispose of contaminated soils.

Spill prevention for solid waste shall conform to the following practices: Solid waste management procedures and practices are designed to prevent or reduce the discharge of pollutants to stormwater from solid or construction waste by providing designated waste collection areas and containers, arranging for regular disposal, and training employees and subcontractors. Solid waste generated from trees and shrubs removed during land clearing, demolition of existing structures, and building construction. Packaging materials including wood, paper, and plastic. Scrap or surplus building materials including scrap metals, rubber, plastic, glass pieces and masonry products. Domestic wastes including food containers such as beverage cans, coffee cups, paper bags, plastic wrappers, and cigarettes. Construction wastes including brick, mortar, timber, steel and metal scraps, pipe and electrical cuttings, non–hazardous equipment parts, Styrofoam and other package construction materials. Select designated waste collection areas onsite. Inform trash–hauling contractors that you will accept only watertight dumpsters for onsite use. Inspect dumpsters for leaks and repair any dumpster that is not watertight. Provide an adequate number of containers with lids or covers that can be placed over the container to keep rain out or to prevent loss of wastes when it is windy. Plan for additional containers and more frequent pickup during the demolition phase of construction. Collect site trash daily, especially during rainy and windy conditions. Remove this solid waste promptly since erosion and sediment control devices tend to collect litter. Make sure that toxic liquid wastes (used oils, solvents and paints) and chemicals (acids, pesticides, additives, curing compounds) are not disposed of in dumpsters designed for construction debris. Do not hose out dumpsters on the construction site. Leave dumpster cleaning to the trash hauling contractor. Arrange for regular waste collection before containers overflow. Clean up immediately if a container does spill. Make sure that construction waste is collected, removed, and disposed of only at authorized disposal areas. Solid waste storage areas should be located at least 50 ft from drainage facilities and watercourses and should not be located in areas prone to flooding or ponding. Inspect construction waste area regularly. Arrange for regular waste collection.

Spill prevention for concrete washout shall conform to the following practices: Store dry and wet materials under cover, away from drainage areas. Avoid mixing excess amounts of fresh concrete. Perform washout of concrete trucks offsite or in designated areas only. Do not wash out concrete trucks into storm drains, open ditches, streets, or streams. Do not allow excess concrete to be duped onsite, except in designated areas. Locate washout areas at least 50 ft from storm drains, open ditches, or water bodies. Do not allow runoff from this area by constructing a temporary pit or bermed area large enough for liquid and solid waste. Wash out wastes into the temporary pit where the concrete can set, be broken up, and then disposed properly. Avoid creating runoff by draining water to a bermed or level area when washing concrete to remove fine particles and expose the aggregate. Do not wash sweepings from exposed aggregate concrete into the street or storm drain. Collect and return sweepings to aggregate base stockpile or dispose in the trash.

The cleanup parameters shall conform to the following practices: The developer / homeowners association shall be continually kept informed, maintain lists of qualified contractors and available Vac–trucks, tank pumpers and other equipment readily accessible for cleanup operations. In addition, a continually updated list of available absorbent materials and cleanup supplies should be kept on site. All maintenance personnel will be made aware of techniques for prevention of spills. They will be informed of the requirements and procedures outlined in this plan. They will be kept abreast of current developments or new information on the prevention of spills and / or necessary alteration to this plan. When spills occur which could endanger human life and this become primary concern, the discharge of the lifesaving protection function will be carried out by the local police and fire departments. Absorbent materials, which are used in cleaning up spilled materials, will be disposed of in a manner subject to the approval of the Indiana Department of Environmental Management. Flushing of spilled material with water will not be permitted unless so authorized by the Indiana Department of Environmental Management.

Spill prevention for vehicle and equipment maintenance shall conform to the following practices: Prevent or reduce the contamination of stormwater resulting from vehicle and equipment maintenance by running a "dry and clean site". The best option would be to perform maintenance activities at an offsite facility. If this option is not available then work should be performed in designated areas only, while providing cover for materials stored outside, checking for leaks and spills, and containing and cleaning up spills immediately. These procedures are suitable on all construction projects where an onsite yard area is necessary for storage and maintenance of heavy equipment and vehicles. Onsite vehicle and equipment maintenance should only be used where it is impractical to send vehicles and equipment offsite for maintenance and repair. Sending vehicles / equipment offsite should be done in conjunction with a stabilized construction entrance / exit. Outdoor vehicle or equipment maintenance is a potentially significant source of stormwater pollution. Activities that can contaminate stormwater include engine repair and service, changing or replacement of fluids, and outdoor equipment storage and parking (engine fluid leaks). If maintenance must occur onsite, use designated areas, located away from drainage courses. Dedicated maintenance areas should be protected from stormwater runon and runoff, and should be located at least 50 ft from downstream drainage facilities and water courses. Drip pans or absorbent pads should be used during vehicle and equipment maintenance work that involves fluids, unless the maintenance work is performed over and impermeable surface in a dedicated maintenance area. Place a stockpile of spill cleanup materials where it will be readily accessible. All fueling trucks and fueling areas are required to have spill kits and/or use other spill protection devices. Use absorbent materials on small spills. Remove the absorbent materials promptly and dispose of properly. Inspect onsite vehicles and equipment daily at startup for leaks, and repair immediately. Deep vehicles and equipment clean; do not allow excessive buildup of oil and grease. Segregate and recycle wastes, such as greases, used oil or oil filters, antifreeze, cleaning solutions, automotive batteries, hydraulic and transmission fluids. Provide secondary containment and covers for these materials if stored onsite. Train employees and subcontractors in proper maintenance and spill cleanup procedures. Drip pans or plastic sheeting should by placed under all vehicles and equipment placed on docks, barges, other structures over water bodies when the vehicle or equipment is planned to be idle for more than 1 hour. Properly dispose of used oils, fluids, lubricants, and spill cleanup materials. Properly dispose of or recycle used batteries. Do not place used oil in a dumpster or pour into a storm drain or water course. Properly dispose of used oils, fluids, lubricants, and spill cleanup materials. Don not bury tires. Repair leaks of fluids and oil immediately.

Spill prevention for fertilizers shall conform to the following practices: Fertilizer's used will be applied only in the minimum amounts recommended by the manufacturer. Once applied, fertilizer will be worked into the soil to limit exposure to storm water. The contents of any partially used bags of fertilizer will be transferred to a sealable plastic bin to avoid spills.

Spill prevention for paint and solvents shall conform to the following practices: All containers will be tightly sealed and stored when not required for use. EXCESS PAINT WILL NOT BE DISCHARGED TO THE STORM SEWER SYSTEM but will be properly disposed of according to manufacturers' instructions or State or local regulations.

Spill prevention and cleanup shall conform to IDEM form 327 IAC 2–6 and the Local Fire Department shall be contacted in the case of a material spill occurring.

CONTACT INFORMATION:
TOWN OF MCCORDSVILLE (PLANNING & BUILDING DEPARTMENT)
CALL (317) 335–3604 TO REPORT SPILL
INDIANA DEPARTMENT OF ENVIRONMENTAL MANAGEMENT EMERGENCY REPONSE:
1–888–233–7745

(B15) MATERIAL HANDLING & STORAGE PROCEDURES ASSOCIATED WITH CONSTRUCTION ACTIVITY:

The material handling and storage procedures can be found under item B(14) on this sheet.

(C1) DESCRIPTION OF POLLUTANTS & THEIR SOURCES ASSOCIATED WITH THE PROPOSED LAND USE:

Potential pollutant sources that may appear at the site due to proposed land use activities include, but are not limited to vehicles, exposed soil and trash. Potential pollutants include, but are not limited to oil, grease, diesel fuel, gasoline, anti–freeze, automobile fluids, auto soap and fertilizer.

(C2) DESCRIPTION OF PROPOSED POST-CONSTRUCTION STORMWATER MEASURES:

Stormwater runoff from the subject site will be routed through A storm water quality unit (AquaSwirl Xcelerator) to remove suspended solids, debris, floatables before the water passes into the isolator row of the on–site infiltration/detention system. See sheets C3.0, C7.1 for location, details and specifications of the stormwater routing and management. Stormwater runoff will be routed to the BMP for TSS removal, permanent seeding, and the implementation of a landscaping plan will help in the reduction of pollutants in stormwater run–off as well.

(C3) PLAN DETAILS FOR EACH STORMWATER MEASURE:

Stormwater runoff from the subject site will be routed through storm water quality unit (AquaSwirl Xcelerator) to remove suspended solids, debris, floatables before the water passes into the storm sewer system and routed downstream to the existing detention system. See sheets C3.0, C7.1 for location, details and specifications of the stormwater routing and management.

(C4) SEQUENCE DESCRIBING STORMWATER MEASURE IMPLEMENTATION:

The implementation sequence can be found under item B(12) on this sheet. Final (post construction) stormwater quality measures will be implemented as the installation of subsurface utilities, grading and pavement is finalized. The Stormwater Quality BMP (AquaSwirl Xcelerator), serving as the primary post construction stormwater quality measures, providing the needed 50% TSS removal as a stormwater quality BMP. The existing wet detention pond provides the remaining TSS removal.

(C5) MAINTENANCE GUIDELINES FOR PROPOSED POST-CONSTRUCTION STORMWATER MEASURES:

An Operations & Maintenance Manual has been provided for the Stormwater Quality BMPs (AquaSwirl Xcelerator). Remove all trash or debris collected above inlet castings and within the storm sewer infrastructure. The pavement should be swept and kept free of sediment carried in by vehicles. A dry absorbent material such as "kitty litter" or "floor dry" should be used to soak up liquids left behind by vehicles. Keep all turf and trees well irrigated to promote vigorous growth. The maintenance for the proposed post–construction water quality measures will be provided for by the property owner.

(C6) ENTITY THAT WILL BE RESPONSIBLE FOR THE OPERATION & MAINTENANCE OF THE STORMWATER MEASURES:

The maintenance for the proposed post–construction Stormwater Quality BMP (AquaSwirl Xcelerator) will be provided for by the property owner.

DAVE CRAVENS
BDC REALTY GROUP, LLC
6274 SOUTH FOX CHASE
PENDLETON, INDIANA 46064
(765) 635-5559

REVISION RECORD

REV	DATE	DESCRIPTION	DES BY	APP BY

BDC REALTY GROUP, LLC
6274 S FOX CHASE
PENDLETON, IN 46064

CIVIL SITE GROUP, INC.
718 Adams Street, Suite E
Carmel, Indiana 46032
Ph: (317) 810–1677
CivilSite GROUP, INC.

PRELIMINARY NOT FOR CONSTRUCTION
BRIAN S CRAIGMILE
REGISTERED
No. PE19900641
STATE OF INDIANA
PROFESSIONAL ENGINEER
DATE: 06/06/2025

DWN BY:	BSC
CHKD. BY:	BSC
SCALE:	N/A
DATE:	06/06/25

SHOPPES at BROOKSIDE - BLOCK A
CR 600 W
McCORDSVILLE, IN 46055

STORMWATER POLLUTION PREVENTION PLAN NOTES
PHASE II - SOUTH BUILDING

PROJECT NUMBER
BRG.007

DRAWING NUMBER
C4.2
SHEET 7 OF 24

TOPOGRAPHIC & BOUNDARY NOTE

ALL EXISTING HORIZONTAL AND VERTICAL INFORMATION HAS BEEN SHOWN PER A TOPOGRAPHIC SURVEY DATED 03/11/2024 PREPARED BY CROSSROAD ENGINEERG, P.C.; THEREFORE, CIVIL SITE GROUP, INC. CANNOT BE HELD RESPONSIBLE IF ACTUAL HORIZONTAL AND VERTICAL DATA IS DIFFERENT FROM THAT SHOWN ON THESE PLANS. CONTRACTOR IS RESPONSIBLE FOR FIELD VERIFICATION OF ALL EXISTING CONDITIONS PRIOR TO COMMENCING WITH CONSTRUCTION.

UTILITY CROSSINGS UNDER PAVEMENT

ALL UTILITY CROSSINGS UNDER PAVEMENT MUST BE JACK & BORE OR DIRECTIONAL DRILLED. OPEN CUTS SHALL NOT BE PERMITTED.

NOTE

UTILITY WORK WITHIN THE EXISTING RIGHT-OF-WAY OR WITHIN 5' OF EXISTING R/W PAVEMENT REQUIRES FLOWABLE FILL.

FLOOD NOTE

THIS LOT LIES ENTIRELY IN FLOOD HAZARD ZONE "X" AS SCALED FROM THE FLOOD INSURANCE RATE MAP (FIRM) FOR HANCOCK COUNTY, INDIANA, COMMUNITY NUMBER 180468, MAP NUMBER 18059C0016D, PANEL NUMBER 0016 D, DATED DECEMBER 4, 2007.

REFERENCE NFIP FIRM MAP #18059C0016D, EFFECTIVE DATE: DECEMBER 4, 2007

UTILITY VALVE NOTE

ALL UTILITY VALVES AFFECTED BY CONSTRUCTION SHALL BE ADJUSTED TO FINAL GRADE AS NEEDED TO BE FLUSH WITH FINISHED PAVEMENT, SIDEWALK OR LANDSCAPE AREA.

UTILITY LOCATE NOTE

INDIANA 811 FAILED TO LOCATE ALL EXISTING UTILITIES ON AND/OR SURROUNDING THE SUBJECT SITE; THEREFORE, CONTRACTOR IS RESPONSIBLE TO LOCATE AND FIELD VERIFY ANY EXISTING UTILITIES BEFORE COMMENCING WITH CONSTRUCTION. CIVIL SITE GROUP, INC. CANNOT BE HELD RESPONSIBLE IF THE PROPOSED IMPROVEMENTS INTERFERE WITH ANY EXISTING UTILITY INFORMATION NOT SHOWN ON THESE PLANS.

IRRIGATION NOTE

SITE IRRIGATION IS NOT SHOWN ON THESE PLANS. IF SITE IRRIGATION IS REQUIRED, CONTRACTOR SHALL WORK WITH THE LOCAL WATER UTILITY TO DETERMINE THE REQUIREMENTS & LOCATION FOR THE IRRIGATION METER & SITE IRRIGATION SYSTEM.

Indiana811 Know what's below. Call before you dig.

NOTE

REFER TO ARCHITECTURAL & FOUNDATION PLANS FOR ALL BUILDING DIMENSIONS.

GENERAL NOTES

1. TEMPORARY TRAFFIC CONTROL DURING CONSTRUCTION TO CONFORM TO APPLICABLE LOCAL AND STATE STANDARDS.
2. ALL CONSTRUCTION ACTIVITY ON THIS SITE TO BE PERFORMED IN COMPLIANCE WITH APPLICABLE O.S.H.A. STANDARDS FOR WORKER SAFETY.
3. IT SHALL BE THE CONTRACTORS RESPONSIBILITY TO FIELD VERIFY ALL UTILITY LOCATIONS & DEPTHS BEFORE CONSTRUCTION BEGINS.
4. IT SHALL BE THE CONTRACTORS RESPONSIBILITY TO FIELD VERIFY ALL EXISTING ELEVATIONS BEFORE CONSTRUCTION BEGINS.

NORTH

20 0 10 20

(IN FEET)
1 inch = 20 ft.

REVISION RECORD

REV	DATE	DESCRIPTION	DES BY	APP BY
1	07/01/25	REV. PER TAC REVIEW	BSC	BSC

LEGEND:

- PROPERTY BOUNDARY
- RIGHT-OF-WAY
- PROPOSED STORM SEWER
- PROPOSED STORM STRUCTURE
- E — PROPOSED ELECTRIC SERVICE
- T — PROPOSED TELECOM SERVICE
- G — PROPOSED GAS SERVICE
- RPM — PROPOSED RPM – BLUE REFLECTOR
- E — PROPOSED PRIMARY 3ø NINESTAR CONNECT ELECTRIC TRANSFORMER
- KICKER, PLUG, TEE, BEND FITTING
- GATE VALVE
- HYDRANT WITH HYDRANT VALVE
- C.O. — 6" SAN. LATERAL CLEANOUT–CLEANOUTS INSTALLED IN PAVED AREAS MUST HAVE A HEAVY DUTY CASTING TO WITHSTAND TRAFFIC LOADING. REFER McCORDSVILLE DETAIL SHEETS 8–10

CITIZENS ENERGY NOTES:

Domestic Water / Fire Service:
1. All work must be completed by a bonded Contractor according to Section 1.13 of the Water Standards.
2. The water/fire service permit cannot be approved until the sanitary lateral permit has been approved.
3. Please note that open cutting the asphalt path and the method of restoration is subject to the City's approval, not Citizens.

Service Line Requirements:
4. Ensure that a minimum of a 10' horizontal separation and an 18" vertical separation between sewer lines (sanitary or storm) and the water service lines is maintained.
5. A sewer and water crossing must be at a minimum of 45 degrees.

Domestic Service:
6. Please note that copper or ductile iron pipe must be run from 5 feet outside of the building footer into the building to the meter setup.
7. Please note that open cutting the asphalt path and the method of restoration is subject to the City's approval, not Citizens.

Fire Service:
Please submit for a hydrant flow request:
https://www.citizensenergygroup.com/For-Partners/Contractors-Builders/Permits-and-Forms/Hydrant-Flow-Test.

Sanitary Sewer Lateral Service:
1. Full depth granular backfill required under pavement. Refer to Fig 400.01 on Sheet C7.3.
2. Ensure that a minimum of a 10' horizontal separation and an 18" vertical separation between sewer lines (sanitary or storm) and the water service lines is maintained
3. Sewer lateral and utility crossings must be at a minimum of 45 degrees horizontal.
4. Cleanouts installed in paved areas must have a heavy duty casting to withstand traffic loading. Refer to Fig 400.10 on Sheet C7.3.
5. Tracer wire required to be attached to sewer laterals per Citizens Westfield Stds.

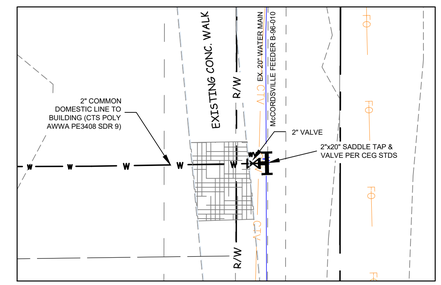

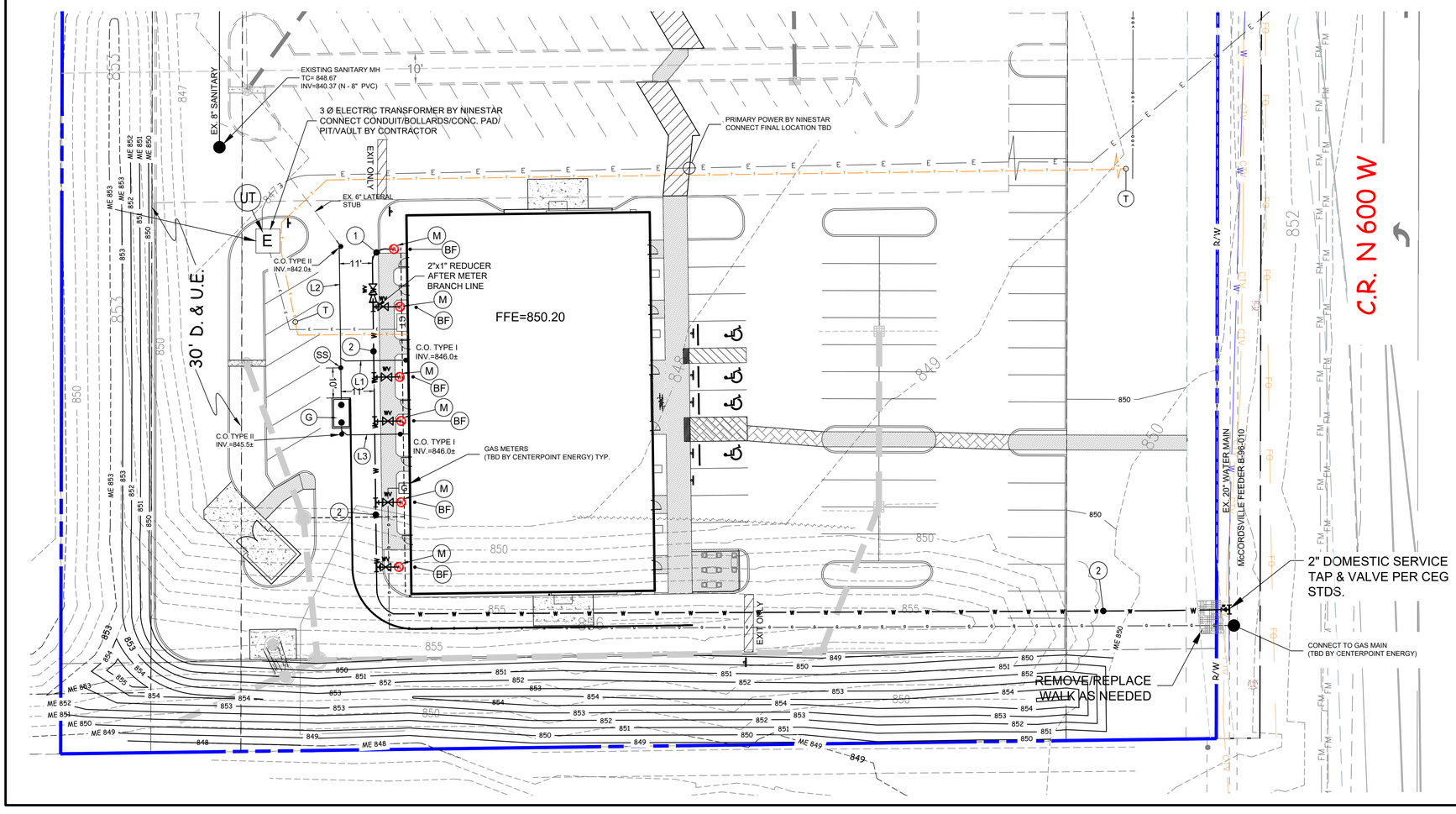

PLAN NOTES:

- (A) LIGHT POLE FOUNDATION (REFER TO LIGHTING PLAN)
- (B) PEDESTRIAN BOLLARD LIGHT (REFER TO LIGHTING PLAN)
- (UX) UTILITY CROSSING
- (L1) 25± LF OF 6–INCH SDR35 PVC (ASTM D–3034) @ 1.04% MIN. WITH TRACER WIRE ATTACHED PER MCCORDSVILLE STDS. REFER McCORDSVILLE DETAIL SHEETS 8 & 9
- (L2) 55± LF OF 6–INCH SDR35 PVC (ASTM D–3034) @ 1.04% MIN. WITH TRACER WIRE ATTACHED PER MCCORDSVILLE STDS. REFER McCORDSVILLE DETAIL SHEETS 8 & 9
- (L3) 25± LF OF 6–INCH SDR35 PVC (ASTM D–3034) @ 1.04% MIN. WITH TRACER WIRE ATTACHED PER MCCORDSVILLE STDS. REFER McCORDSVILLE DETAIL SHEETS 8 & 9
- (CC) CONCRETE CRADLE REQ'D. BETWEEN PIPES
- (18) 10 FOOT HORIZONTAL & 18–INCH VERTICAL SEPARATION REQ'D. BETWEEN SEWER (SANITARY OR STORM) & WATER SERVICE LINES
- (UT) PROPOSED 3ø 120/208V ELECTRIC TRANSFORMER BY NINESTAR CONNECT
- (M) 3/4–INCH METER PIT PER CEG STDS. RPZ TO BE SET INSIDE BLDG. REFER TO CEG STD. PRACTICE T
- (M1) 1–INCH METER PIT PER CEG STDS. RPZ TO BE SET INSIDE BLDG. REFER TO CEG STD. PRACTICE T
- (1) 1–INCH I.D. COMMON DOMESTIC WATER SERVICE LINE (CTS POLY AWWA, PE3408 SDR9)
- (2) 2–INCH I.D. COMMON DOMESTIC WATER SERVICE LINE (CTS POLY AWWA, PE3408 SDR9); REFER TO CEG STD. PRACTICE N
- (BF) RPZ BACKFLOW TO BE SET INSIDE BLDG. PER CEG STDS.
- (T) TELECOM SERVICE – 4–INCH PVC CONDUIT (QTY 2)
- (G) 1000 GALLON (MIN) GREASE TRAP. REFER McCORDSVILLE DETAIL SHEET 8 & DETAIL SHEET C7.1
- (SS) SAMPLING STRUCTURE DOWNSTREAM OF GREASE TRAP PER McCORDSVILLE STDS.

SEWER LATERAL BACKFILL

FULL DEPTH GRANULAR BACKFILL IS REQ'D. UNDER ALL PAVEMENT. REFER TO McCORDSVILLE DETAILS SHEETS 9 & 10

SITE LIGHTING NOTE

SITE LIGHTING IS NOT SHOWN ON THESE PLANS. 2–1½" CONDUITS (SITE LIGHTING & SECURITY) REQUIRED TO ALL PARKING LOT LIGHT POLE LOCATIONS. ALL CONDUIT RUNS SHALL BE TRENCHED INSTALLED WITH COMPACTED GRANULAR BACKFILL TO PAVEMENT SUBGRADE – PLOWED OR RAKED INSTALLATION OF CONDUITS ARE PROHIBITED

UTILITY NOTES

1. IT SHALL BE THE RESPONSIBILITY OF EACH CONTRACTOR TO VERIFY ALL EXISTING UTILITIES AND CONDITIONS PERTAINING TO THEIR PHASE OF WORK. IT SHALL ALSO BE THE CONTRACTORS RESPONSIBILITY TO CONTACT THE OWNERS OF THE VARIOUS UTILITIES FOR PROPER STAKE LOCATIONS FOR EACH UTILITY BEFORE WORK IS STARTED. THE CONTRACTOR SHALL NOTIFY IN WRITING THE OWNER OR THE ENGINEER OF ANY CHANGES, OMISSIONS, OR ERRORS FOUND ON THESE PLANS OR IN THE FIELD BEFORE WORK IS STARTED OR RESUMED.
2. STANDARD SPECIFICATIONS FOR THE LOCAL GOVERNING AGENCY SHALL APPLY FOR ALL SANITARY SEWERS, STORM SEWERS, AND WATER MAINS.
3. ANY PART OF THE SANITARY OR STORM SEWER TRENCHES RUNNING UNDER PAVED AREAS TO BE BACKFILLED WITH GRANULAR MATERIAL.
4. ALL WATER MAINS TO HAVE **60" MINIMUM COVER** OVER TOP OF PIPE.
5. STERILIZATION OF WATER MAIN SHALL BE IN ACCORDANCE WITH STATE BOARD OF HEALTH REQUIREMENTS. (APPLIES TO COMMERCIAL ONLY)
6. CONTRACTOR RESPONSIBLE TO INSTALL ALL UNDERGROUND CONDUIT PER UTILITY COMPANY'S SPECIFICATIONS.
7. CONTRACTOR RESPONSIBLE FOR RESTORATION TO ALL AREAS AFFECTED DURING CONSTRUCTION. REFER TO THE TOWN OF FISHERS STANDARDS FOR RESTORATION REQ'S.
8. CONTRACTOR TO LOCATE ALL EXISTING UTILITIES AT ANY PROPOSED CROSSING AND PROVIDE EXISTING TOP OF PIPE ELEVATIONS WITHIN 10 DAYS OF NOTICE TO PROCEED. PROVIDE CONCRETE CRADLE AS REQUIRED FOR ANY VERTICAL SEPARATION LESS THAN 18 INCHES.

BDC REALTY GROUP, LLC
6274 S FOX CHASE
PENDLETON, IN 46064

CIVIL SITE GROUP, INC.
718 Adams Street, Suite E
Carmel, Indiana 46032
Ph: (317) 810-1677
CivilSite GROUP, INC.

BRIAN S CROSS REGISTERED PROFESSIONAL ENGINEER STATE OF INDIANA
PRELIMINARY NOT FOR CONSTRUCTION
DATE: 06/06/2025

DWN BY:	BSC
CHKD. BY:	BSC
SCALE:	1" = 20'
DATE:	06/06/25

THE SHOPS at BROOKSIDE - BLOCK A
CR 600 W
McCORDSVILLE, IN 46055

UTILITY PLAN
PHASE II - SOUTH BUILDING

PROJECT NUMBER
BRG.007

DRAWING NUMBER
C5.0
SHEET 8 OF 24

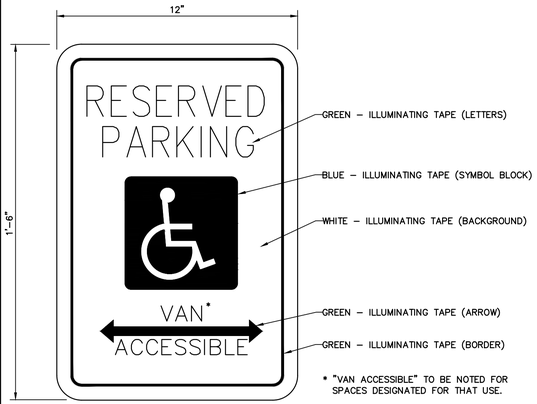

15 C7.0 HANDICAP PARKING SIGN DETAIL
NOT TO SCALE

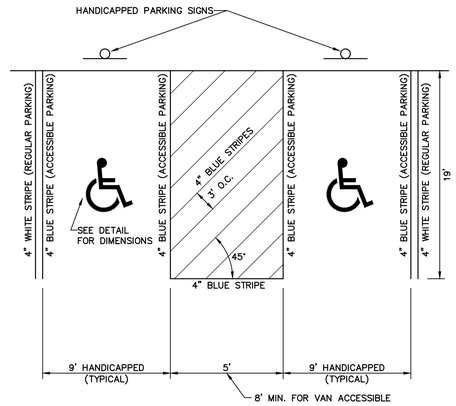

08 C7.0 HANDICAP PARKING STALLS
NOT TO SCALE

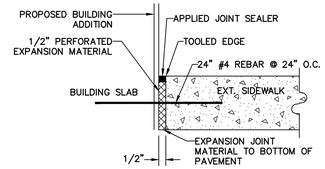

EXPANSION JOINT AT BUILDING DETAIL

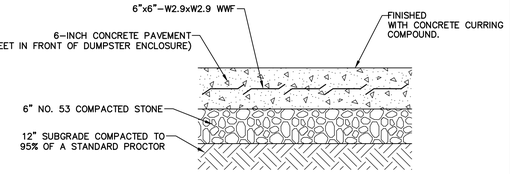

01 C7.0 CONCRETE PAVEMENT SECTION
NOT TO SCALE

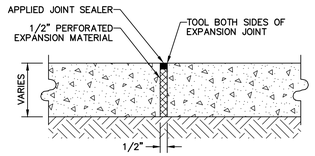

EXPANSION JOINT DETAIL

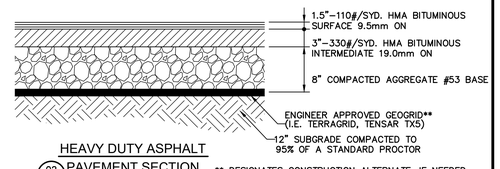

HEAVY DUTY ASPHALT
02 C7.0 PAVEMENT SECTION
NOT TO SCALE
** DESIGNATES CONSTRUCTION ALTERNATE, IF NEEDED

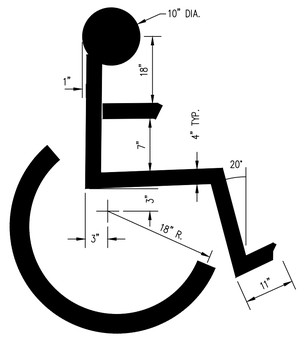

NOTE: ALL STRIPES TO BE 4" BLUE PAINT

10 C7.0 PAINTED HANDICAP SYMBOL DETAIL
NOT TO SCALE

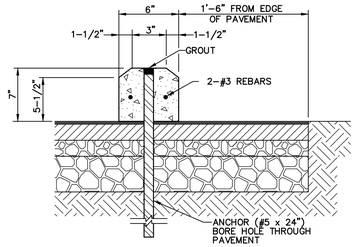

SECTION A-A

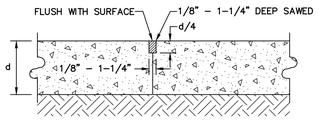

CONTROL JOINT

07 C7.0 JOINT DETAILS
NOT TO SCALE

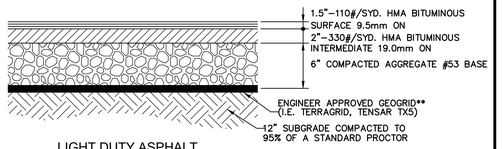

LIGHT DUTY ASPHALT
03 C7.0 PAVEMENT SECTION
NOT TO SCALE
** DESIGNATES CONSTRUCTION ALTERNATE, IF NEEDED

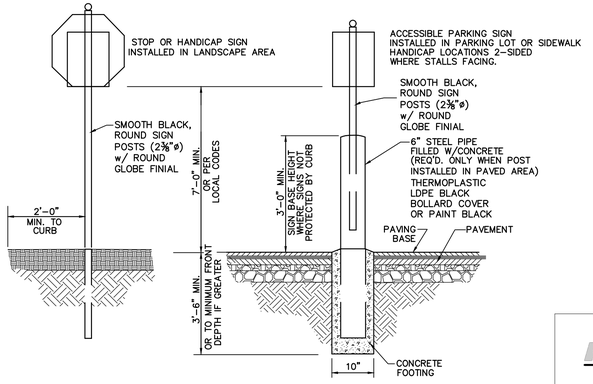

16 C7.0 TRAFFIC SIGNAGE
NOT TO SCALE

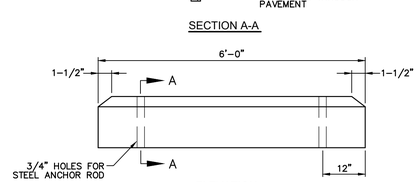

ELEVATION

09 C7.0 PRECAST CONCRETE WHEELSTOP
NOT TO SCALE

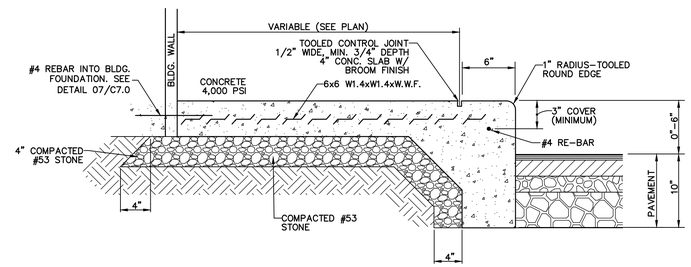

04 C7.0 COMBINED CURB & WALK DETAIL
NOT TO SCALE

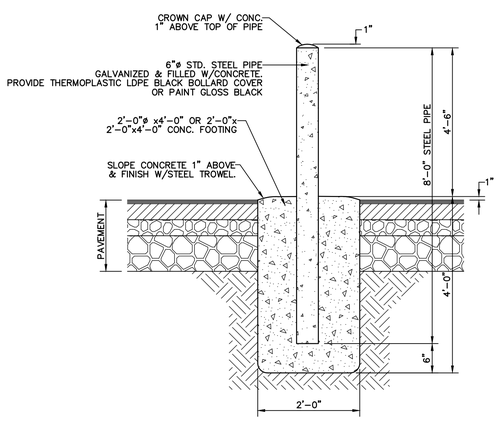

17 C7.0 6" DIAMETER STANDARD STEEL PIPE BOLLARD
NOT TO SCALE

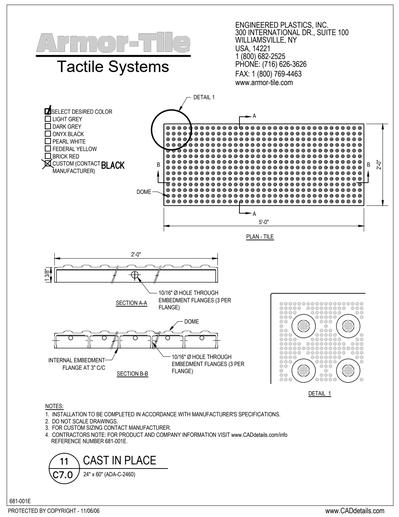

11 C7.0 CAST IN PLACE
24" x 60" (ADA-C-2460)

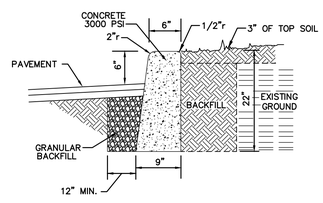

06 C7.0 STRAIGHT CONCRETE CURB DETAIL
NOT TO SCALE

TOWN OF MCCORDSVILLE STANDARDS

CONTRACTOR TO CONSTRUCT ALL APPLICABLE SITE IMPROVEMENTS TO THE TOWN OF McCORDSVILLE CURRENT STANDARDS PER THE ATTACHED STANDARD DETAIL SHEETS.

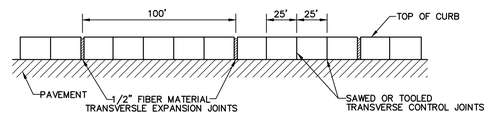

14 C7.0 CURB JOINT DETAIL
NOT TO SCALE

REVISION RECORD

REV	DATE	DESCRIPTION	DES BY	APP BY
1	07/01/25	REV. PER TAC REVIEW	BSC	BSC

BDC REALTY GROUP, LLC
6274 S FOX CHASE
PENDLETON, IN 46064

CIVIL SITE GROUP, INC.
718 Adams Street, Suite E
Carmel, Indiana 46032
Ph: (317) 810-1677

PRELIMINARY NOT FOR CONSTRUCTION
BRIAN S CROSS REGISTERED PROFESSIONAL ENGINEER
DATE: 06/06/2025

DWN BY:	BSC
CHKD. BY:	BSC
SCALE:	N/A
DATE:	06/06/25

SHOPPES at BROOKSIDE - BLOCK A
CR 600 W
McCORDSVILLE, IN 46055

GENERAL DETAILS
PHASE II - SOUTH BUILDING

PROJECT NUMBER
BRG.007

DRAWING NUMBER
C7.0
SHEET 9 OF 24

REVISION RECORD				
REV	DATE	DESCRIPTION	DES BY	APP BY
1	07/01/25	REV. PER TAC REVIEW	BSC	BSC

STORM SEWER INLET NOTE

ALL STORM WATER INLETS & CATCH BASIN CASTINGS SHALL BE LABELLED WITH ENVIRONMENTAL MESSAGING "NO DUMPING, DRAINS TO STREAM" CAST IN RAISED OR RECESSED LETTERS AT A MIN. 1-INCH HEIGHT. A SYMBOL OF A FISH SHALL ALSO BE CAST WITH THE LETTERS

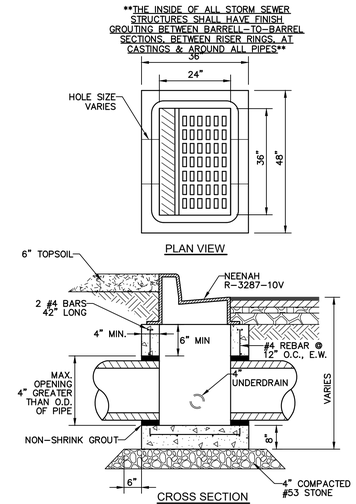

03 C7.1 CURB INLET TYPE "M"
NOT TO SCALE

DIMENSIONS (INCHES)		
A (MAX.)	B (I.D.)	C (MIN.)
18	48	25
21	48	28
24	48	31
27	60	34
30	60	38
33	60	41
36	60	44
42	60	50

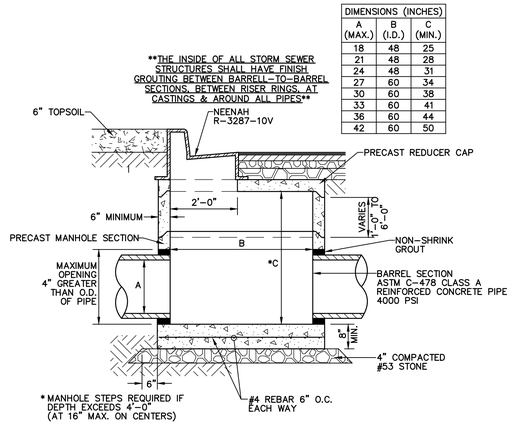

01 C7.1 CURB MANHOLE
NOT TO SCALE

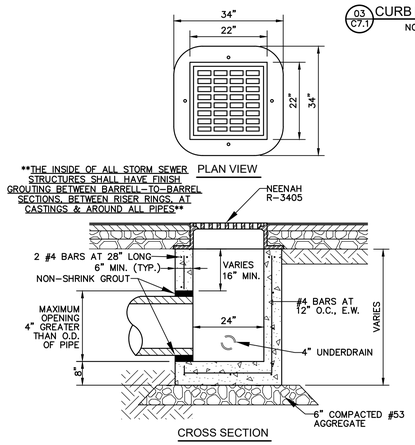

02 C7.1 PAVEMENT INLET TYPE "A"
NOT TO SCALE

SHALL MEET CITIZENS WESTFIELD STDS/SPECS PER CEG FIG. 300.10

McCreary Concrete Products Inc
765-932-3058 OR 765-675-1982

citizens water

1000 GALLON COMMERCIAL GREASE/OIL/SEDIMENT INTERCEPTOR, H20 LOAD BEARING, TRAFFIC RATED WESTFIELD SPECIFICATION, 6" SIDEWALL CONSTRUCTION

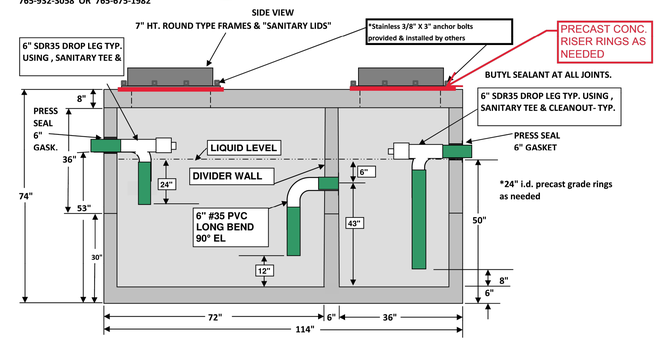

NOT TO SCALE | TOTAL STRUCTURE WEIGHT 22,725 LBS | RMC3112019

AQUA SWIRL OFF-LINE ARRANGEMENT

NOTE: BACKFILL AROUND THE PERIMETER OF THE STRUCTURE SHALL BE "B" BORROW OR EQUIVALENT GRANULAR MATERIAL COMPACTED TO 95% STANDARD PROCTOR DENSITY (INSTALLED IN MAX. 12" LIFTS)

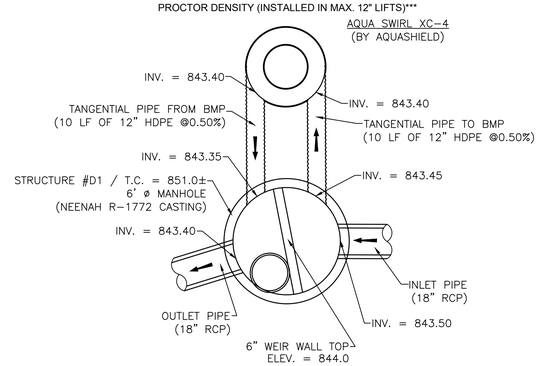

DIVERSION STRUCTURE (STR# D1)

Aqua-Swirl® Polymer Coated Steel (PCS) Stormwater Treatment System

Projected View
SCALE 1:70

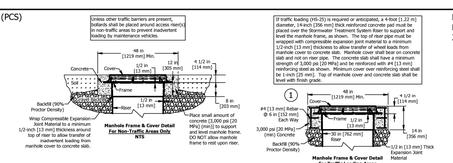

Please see accompanied Aqua-Swirl® specification notes. See Site Plan for actual System orientation. Approximate dry (pick) weight: 2200 lbs [1000 kg].

1. As an alternative, 42 in [1067 mm] diameter, HS-20/25 rated precast concrete rings may be substituted. 14 in [356 mm] thickness must be maintained.
2. XC-5 inlet/outlet pipe size ranges up to 30 in [762 mm].
3. XC-5 chamber height may vary up to 116 in [2946 mm], depending on inlet/outlet pipe size.
4. Orientation may vary from a minimum of 90° to a maximum of 180°. Clockwise or counterclockwise orientation as needed.

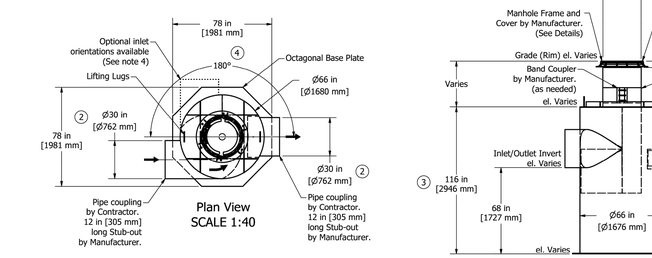

Elevation View
SCALE 1:40

AquaShield
2723 Kanasta Drive, Suite 111, Chattanooga, TN 37343
Phone (888) 344-9044 Fax (423) 826-2132
www.aquashieldinc.com

Aqua-Swirl® XCelerator XC-5 CCW

Standard Detail

Structure #	XC-5 STD	Revised	Rev. Date
Drawn By:	OrTown		
Scale:	As Shown		
Date:	7/25/2021		

U.S. Patent No. 9,574473 and other Patent Pending

Supercoat Finish

BDC REALTY GROUP, LLC
6274 S FOX CHASE
PENDLETON, IN 46064

CIVIL SITE GROUP, INC.
718 Adams Street, Suite E
Carmel, Indiana 46032
Ph: (317) 810-1677

CivilSite GROUP, INC.

BRIAN S CROSE REGISTERED PROFESSIONAL ENGINEER
STATE OF INDIANA
PE10810647
PRELIMINARY NOT FOR CONSTRUCTION
DATE: 06/06/2025

DWN BY:	BSC
CHKD. BY:	BSC
SCALE:	N/A
DATE:	06/06/25

SHOPPES at BROOKSIDE - BLOCK A
CR 600 W
McCORDSVILLE, IN 46055

GENERAL DETAILS
PHASE II - SOUTH BUILDING

PROJECT NUMBER
BRG.007

DRAWING NUMBER
C7.1
SHEET 10 OF 24

CITIZENS WATER
STANDARD PRACTICE A

REVISION DATE: 09/29/2021 ISSUE DATE: 6/8/2009

WATER MAIN SEPARATION FROM OTHER UTILITIES

NOTE:
WATER MAIN AND SANITARY SEWERS SHALL BE PLACED IN SEPARATE TRENCHES.

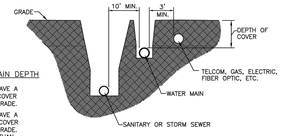

TYPICAL WATER MAIN DEPTH

1. ALL PIPE SHALL HAVE A MINIMUM OF 54" COVER BELOW FINISHED GRADE.
2. ALL PIPE SHALL HAVE A MAXIMUM OF 82" COVER BELOW FINISHED GRADE. DEPTHS GREATER THAN 82" COVER WILL REQUIRE A LOWERING

WATER MAIN LAYING PARALLEL TO OTHER UTILITIES SECTION VIEW

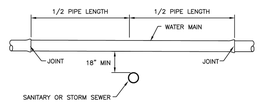

WATER MAIN CROSSING SEWER SECTION VIEW

CITIZENS WATER
STANDARD PRACTICE A.1

REVISION DATE: 9/20/2018 ISSUE DATE: 7/17/2013

WATER MAIN AND SERVICE BACKFILL REQUIREMENTS

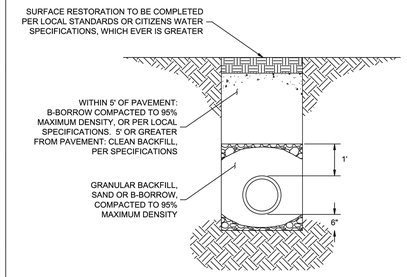

SCALE: NTS

NOTE:
COMPACTED BACKFILL IN LIFTS OF 12" MAXIMUM. TRENCH EXCAVATION SHALL CONFORM TO LOCAL STANDARDS.

CITIZENS WATER
STANDARD PRACTICE A.2

REVISION DATE: 10/02/2019 ISSUE DATE: 12/31/2019

THRUST BLOCKING

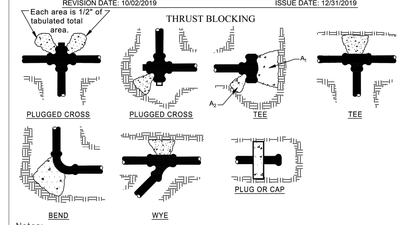

Notes:

1) CONCRETE THRUST BLOCKING TO BE POURED AGAINST UNDISTURBED EARTH.

2) KEEP CONCRETE CLEAR OF JOINT AND ACCESSORIES.

3) POLYETHYLENE ENCASEMENT SHALL BE PLACED BETWEEN CONCRETE AND FITTINGS.

4) ALL POURED IN PLACE CONCRETE SHALL HAVE A 28 DAY STRENGTH OF 3,000 P.S.I., 2" TO 4" SLUMP AND INCLUDE WIRE MESH FOR REINFORCEMENT.

5) MINIMUM SOIL BEARING SURFACE AREA REQUIREMENTS ARE PROVIDED BELOW BASED ON 150 P.S.I. WATER PRESSURE PLUS 100 P.S.I. WATER HAMMER AND SOIL BEARING CAPACITY OF 3,000 POUNDS PER SQUARE FOOT.

Minimum Soil Bearing Surface Area (ft2)
(Assuming 3,000 psf Soil Bearing Capacity)

Pipe Size	Horizontal Bends			Tee or Dead End (Plug/Cap)
	22-1/2°	45°	90°	
6"		6	8	6
8"		6	8	6
12"	4	6	11	8
16"	6	11	22	15
20"	9	18	36	24
24"	13	27	50	36
30"	20	45	76	57
36"	31	59	115	80

CITIZENS WATER
STANDARD PRACTICE N

REVISION DATE: 7/25/2018 ISSUE DATE: 6/8/2009

1-1/2" & 2" SERVICE LINE SWING JOINT

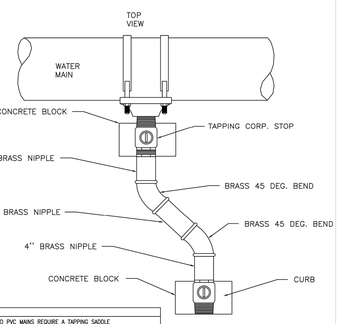

NOTES:
1) ALL SIZE DI, CI, AND PVC MAINS REQUIRE A TAPPING SADDLE
2) ALL SIZE POLY MAINS REQUIRE A FUSED ON TAPPING SADDLE FOR 1-1/2" AND 2" SERVICE LINES.
3) SADDLE AND TAPPING CORP. STOP SUPPLIED & INSTALLED BY CEG. THIS MATERIAL WILL NOT BE SUPPLIED ON DEVELOPER PROJECTS.
4) ALL TAP EXCAVATIONS ARE REQUIRED TO BE BACKFILLED WITH GRANULAR OR FLOWABLE FILL TO A POINT 1'-0" ABOVE WATER MAIN
5) SWING JOINT DIRECTION MUST NOT DEVIATE FROM DRAWING.
6) A COMPRESSION FITTING MUST BE USED OUT OF CURB STOP TO SERVICE LINE
7) STIFFENERS MUST BE USED ON ALL POLY SERVICES.
8) 4" PLASTIC RISER W/ 5-1/4" VALVE BOX MUST BE INSTALLED OVER CURB STOP AND RESTING ON CONCRETE BLOCK
9) POLY SERVICES REQUIRE A TRACER WIRE WHICH SHOULD BE ROUTED ON THE OUTSIDE OF THE 4" RISER THEN STUBBED INSIDE THE RISER AT THE TOP. VERIFY THIS WIRE DOES NOT INTERFERE WITH THE OPERATION OF THE CURB STOP.

CITIZENS WATER
STANDARD PRACTICE O

REVISION DATE: 11/06/2023 ISSUE DATE: 6/8/2009

INSTALLATION OF RESTRAINTS

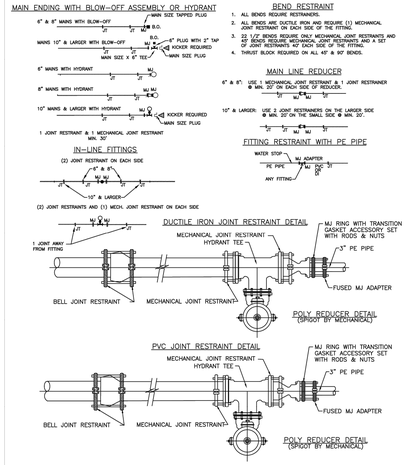

CITIZENS WATER
STANDARD PRACTICE T

REVISION DATE: 11/22/2022 ISSUE DATE: 12/31/2019

STANDARD SERVICE LINE INSTALLATION AND SETTING FOR 5/8", 3/4", AND 1" METER IN SINGLE PIT

ITEM	5/8" & 3/4" METERS	1" METERS
METER PIT COVER	DFW PLASTIC, INC. PART #DFW-E 720-1MM-LID w/ FORD METER BOX, INC. #VBH-7-12-36-18 OR 20" x 24" METAL EXTENSION RING AND 20" HT LINER, OR APPROVED EQUAL. 7" DIA. x 0.25" DEPTH, 11.5" DIA. LID W/ LIL POINT OPENING NUT.	DFW PLASTIC, INC. PART #DFW-E 720-1MM-LID w/ FORD METER BOX, INC. #VBH-7-12-36-18 OR 20" x 24" METAL EXTENSION RING AND 24" HT LINER, OR APPROVED EQUAL. 7" DIA. x 0.25" DEPTH, 11.5" DIA. LID W/ LIL POINT OPENING NUT.
PIT	24X48" PLASTIC RISER: MODIFIED PLASTICS, INC. #24X48-2-PLB (BWTCO) OR APPROVED EQUAL	24X48" PLASTIC RISER: MODIFIED PLASTICS, INC. #24X48-2-PLB (BWTCO) OR APPROVED EQUAL
SUPPORT	SINGLE METER SUPPORT PER STANDARD PRACTICE Z.	SINGLE METER SUPPORT PER STANDARD PRACTICE Z.
YOKE	FORD S51-PF-NDWQ-0 YOKE FOR 5/8" METERS OR FORD APPROVED EQUAL. FORD S61-PF-NDWQ-0 YOKE FOR 3/4" METERS OR APPROVED EQUAL	FORD SA47 FRIGHED YOKE FOR 1" METERS OR APPROVED EQUAL
VALVES: INLET SIDE (FROM MAIN)	D1/2"Q 5/8" ANGLE VALVE W/ COUPLING & 1" COMPRESSION CONNECTION FOR CTS POLY TUBING. FORD B22-444-WT-Q OR APPROVED EQUAL. D1/2"Q 3/4" ANGLE VALVE W/COUPL & 1" COMPRESSION CONNECTION FOR CTS POLY TUBING. FORD B22-666-WT-Q OR APPROVED EQUAL.	1"Q 1" ANGLE VALVE W/ COUPLING & 1" COMPRESSION CONNECTION FOR CTS POLY TUBING. FORD B22-888-WT-Q OR APPROVED EQUAL.

ITEM	5/8" & 3/4" METERS	1" METERS
VALVES: OUTLET SIDE (TO CUSTOMER)	5/8"Q 5/8" GLOBE STYLE COMPRESSION VALVE W/ 7" OPERATING HANDLE & 1/4" COMPRESSION CONNECTION FOR CTS POLY TUBING. FORD B44-333-Q OR B44-333-WT-Q. 3/4"Q 3/4" GLOBE STYLE COMPRESSION VALVE W/ 7" OPERATING HANDLE & 1" COMPRESSION CONNECTION FOR CTS POLY TUBING. FORD B44-444-WT-Q.	1"Q 1" GLOBE STYLE COMPRESSION VALVE W/7" OPERATING HANDLE & 1/4" COMPRESSION CONNECTION FOR CTS POLY TUBING. FORD B44-666-WT-Q.
RISER SIZE & SERVICE LINE SIZE (GOING TO AND FROM VALVES)	1/4" x 1/4" CTS SDR9 HDPE POLY TUBING. 1/4"S, 1" CTS SDR 9 HDPE POLY TUBE W/ 1/4"x1/4" 316 STAINLESS STEEL INSERT COMPRESSION CONNECTIONS WHEN USING CTS POLY TUBING. 1/4" TRACER WIRE, 14 GA. SOLID THHN, BLUE SHELL. TRACING WIRE MUST BE INSTALLED WITH THE POLY SERVICE LINE.	1/2" x 1/2" CTS SDR9 HDPE POLY TUBING. 1/2"S, 1" CTS SDR 9 HDPE POLY TUBE W/ 1/2"x1/2" 316 STAINLESS STEEL INSERT COMPRESSION CONNECTIONS WHEN USING CTS POLY TUBING. 1/4" TRACER WIRE, 14 GA. SOLID THHN, BLUE SHELL. TRACING WIRE MUST BE INSTALLED WITH THE POLY SERVICE LINE.

NOTES:
1. METER FURNISHED & SET BY CITIZENS.
2. YOKE INCLUDING ANGLE & COMPRESSION VALVES FURNISHED TO PLUMBER BY CITIZENS.
3. ALL SERVICE LINES MUST HAVE 4' 1/2" OF COVER REGARDLESS OF THE WATER MAIN DEPTH. AT LEAST 2' OF FLOW, SAND OR PEA GRAVEL REQUIRED AT EACH TAP AND SERVICE LOCATION.
4. LOCATE METER PIT WITHIN 1'-3' OF ROW LINE ON CUSTOMER PROPERTY. THE LOCATION MUST BE ACCESSIBLE AND IN A LEVEL PLACE. THE PIT SHALL NOT BE LOCATED IN DRIVEWAYS.
5. SEE STANDARD PRACTICE DRAWING Z – POLYETHYLENE SERVICE LINE METER SUPPORT (SINGLE METER SET) FOR METER SUPPORT INFORMATION.
6. SERVICE LINE SIZE TO BE ONE SIZE LARGER THAN THE METER SIZE.

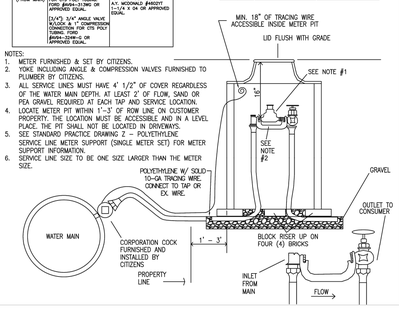

CITIZENS ENERGY GROUP WATER STANDARDS MANUAL, LATEST EDITION (JANUARY 2025), SHALL BE USED FOR ALL WATER SERVICE MATERIALS AND INSTALLATION ASSOCIATED WITH THESE CONSTRUCTION DOCUMENTS

REVISION RECORD

REV	DATE	DESCRIPTION	DES BY	APP BY

BDC REALTY GROUP, LLC
6274 S FOX CHASE
PENDLETON, IN 46064

CIVIL SITE GROUP, INC.
CivilSite GROUP, INC.
718 Adams Street, Suite E
Carmel, Indiana 46032
Ph: (317) 810-1677

BRIAN S CROUCH
REGISTERED
No. PE19910547
STATE OF INDIANA
PROFESSIONAL ENGINEER
PRELIMINARY NOT FOR CONSTRUCTION

DATE: 06/06/2025

DWN BY:	BSC
CHKD. BY:	BSC
SCALE:	N/A
DATE:	06/06/25

SHOPPES at BROOKSIDE - BLOCK A
CR 600 W
McCORDSVILLE, IN 46055

CITIZENS ENERGY GROUP
WATER SERVICE DETAILS
PHASE II - SOUTH BUILDING

PROJECT NUMBER
BRG.007

DRAWING NUMBER
C7.2
SHEET 11 OF 24

EARTHWORK

1. SCOPE OF WORK

A. Extent: The work required under this section consists of all excavating, filling, rough grading and related items necessary to complete the work indicated on the drawings and described in the specifications. The Contractor shall notify in writing the owners and the Engineer of any changes, errors or omissions found on the plans or in the field before work is started or resumed.

1. In general, the items of work to be performed under this section shall include: clearing and grubbing, removal of trees and stumps (where required), protection of trees to remain, stripping and storage of topsoil, fill compaction and rough grading of entire site.

2. Excavated material that is suitable may be used for fills. All unsuitable material and all surplus excavated material not required shall be removed from the site. The location of dump and length of haul shall be the Contractor's responsibility.

3. Provide and place any additional fill material from off the site as may be necessary to produce the grades required. Fill obtained from off site shall be of kind and quality as specified for fills herein and the source approved by the Owner.

4. The Contractor shall accept the site as he finds it and shall remove all trash, rubbish and debris from the site prior to starting excavation.

B. Work not included: The following items of related work are specified and included in other sections of these specifications:

1. Excavation, grading and backfilling for utility lines
2. Storm drainage systems
3. Sanitary sewer systems
4. Streets and paving
5. Water supply system

2. BENCH MARKS

Maintain carefully all bench marks, monuments and other other reference points; if disturbed or destroyed, Contractor shall contact engineer. Replacement shall be at Contractor's expense.

3. REMOVAL OF TREES

A. Remove all trees and stumps from area to be occupied by road and surfaced areas. Removal of trees outside these areas shall only be done as noted on drawings or approved by the Owner.

B. All brush, stumps, wood and other refuse from the trees shall be removed to disposal areas off of the site. Disposal by burning shall not be permitted unless proper permits are obtained (where applicable). ~~The location of on-site bury pits shall be approved by the owner and the Engineer if permitted.~~

4. PROTECTION OF TREES

A. General Protection: The Contractor shall be responsible for the protection of tops, trunks and roots of existing trees on the project site that are to remain. Existing trees subject to construction damage shall be boxed, fenced or otherwise protected before any work is started; do not stockpile within branch spread. Remove interfering branches without injury to trunks and cover scars with tree paint.

5. HANDLING OF TOPSOIL

A. Remove all organic material from the areas to be occupied by buildings, roads, walks and parking areas. Pile and store topsoil at a location where it will not interfere with construction operations. Topsoil shall be reasonably free from subsoil, debris, weeds, grass, stones, etc..

B. After completion of site grading and subsurface utility installation, top soil shall be replaced in areas designated on the erosion control plan for seeding and/or sod. Any remaining topsoil shall be used for finished grading around structures and landscaping areas.

6. DISPOSITION OF UTILITIES:

A. Rules and regulations governing the respective utilities shall be observed in executing all work under this section.

B. If active utilities are encountered but not shown shown on the drawings, the Engineer shall be advised before work is continued.

C. Inactive and abandoned utilities encountered in excavating and grading operations shall be reported to the Engineer. They shall be removed, plugged or capped as directed by the Utility Company or the Engineer.

D. It shall be the responsibility of each contractor to verify all existing utilities and conditions pertaining to his phase of the work. It shall also be the contractors responsibility to contact the owners of the various utilities before work is started.

7. SITE GRADING:

A. Grades: Contractor shall perform all cutting, filling, compacting of fills and rough grading required to bring entire project area to grade as shown on the drawings.

B. Rough Grading: the tolerance for paved areas shall not exceed 0.10 feet plus or minus above the established subgrade. All other areas shall not exceed 0.10 feet plus or minus the established grade. All banks and other breaks in grade shall be rounded at top and bottom.

C. Compaction Requirements:

1. All areas under building pads and paved areas shall be compacted to 98% standard proctor density.

2. All other fill areas shall be compacted to 90% standard proctor density.

3. All areas where cut is necessary to meet the design sub-grade are required to be scarified 12 inches below sub-grade and meet the above compaction requirements.

8. EARTH WORK BALANCE

A. The Contractor shall confirm all earthwork quantities prior to start of construction. If an excess or shortage of earth is encountered, the Contractor shall confirm with the Owner and Engineer the requirements for stockpiling, removal or importing of earth.

B. Minor adjustments to the grades may be required to earthwork balances when minor excess material or shortages are encountered. It is recognized by the parties hereto that the calculations of the the Engineer in determining earthwork quantities shall be accomplished in accordance with the American Society of Civil Engineers Standards for such calculations. Further, that these calculations are subject to the interpretations of soil borings as the physical limits of the various soil types, the allowable variation in finish grade and compaction permitted the contractor, and that all of these parameters may cause either an excess or shortage of actual earthwork materials to complete the project. If such an actual minor excess or shortage of materials occurs, the contractor shall contact the Engineer to determine if adjustment can be made to correct the imbalance of earth.

9. TESTING

A. Contractor shall hire at Contractors expence an independent soil testing service to assure soil compaction with scope of testing to be approved by Engineer. Copies of test results shall be submitted to the Engineer.

SANITARY SEWER SYSTEMS

1. SCOPE OF WORK

A. The work under this section includes all sanitary sewers, manholes, cleanouts and related items including excavating and backfilling, necessary to complete the work shown in the drawings, starting five feet outside the building walls. The ends of sewers shall be tightly plugged or capped at the terminal points, adjacent to buildings, pending the connecting of all such lines to the building drain as specified in the plumbing and architectural drawings. One set of approved plans shall be on the job site at all times.

2. MATERIALS

A. Polyvinyl Chloride Pipe (PVC)

1. 6"–15" PVC pipe shall be SDR 35 and conform to ASTM D3034, with a minimum cell classification of 12454 or 12364. Greater than 15" PVC pipe shall conform to ASTM F679, with a minimum cell classification of 12454–C.

2. All fittings and joints shall be compression type flexible gasketed joints, and manufactured and installed in accordance with the pipe manufacturer's specifications. No solvent cement joints shall be allowed.

B. Ductile Iron Pipe

1. Ductile iron (DI) pipe must meet ASTM A–746 or AWWA C151 with exterior asphaltic coating per AWWA C151 and interior asphaltic coating meeting AWWA C151 or polyethylene lining complying with ASTM D–1248 of nominal 40 mil thickness. Thickness design must be in accordance with AWWA C150.

2. Joint on DI pipe must be the integral bell type gasketed joint meeting AWWA C111 mechanical joint (MJ) meeting AWWA C111, or ANSI 125 lb. flanged joint. Accessories for mechanical and flanged joints must be alloy steel –head bolt and hex nut of Coarse Thread Series Class 2A (External) and Class 2B (Internal) per ANSI B1.1.

C. Manholes

1. Precast reinforced concrete manhole sections and steps and concrete adjusting rings shall conform to ASTM C–478 latest revision. Exterior of manhole shall be waterproofed with Bismatic material.

2. Castings shall be of uniform quality, free from blow holes, porosity, hard spots, shrinkage distortion or other defects. They shall be smooth and well–cleaned by shot–blasting or by some other approved method. They shall be coated with asphalt paint which shall result in a smooth coating, tough and tenacious when cold, not tacky or brittle. They shall be gray iron meeting ASTM A–48 latest revision. Manhole covers for sanitary sewer shall be Neenah Type R–1077–A w/R–1712–B–SP Frame w/Self–Sealing application.

3. Joints – Manhole sections shall be joined with a nominal 1/2" size butyl rubber rubber base gasket material, conforming to AASHTO M–198 and Federal Specification SS–S–210a. Joint conforms to ASTM C–443.

4. Manholes shall include steps. Manhole steps shall be polypropylene coated steel reinforcing or an approved non–corrosive fiberglass material. The copolymer polypropylene shall meet the requirements of ASTM D–4101 with deformed 3/8" dia. or larger reinforcing steel conforming to ASTM A–615, Grade 60. Steps shall be a maximum of 18" from top, 24" from bottom and 16" spacing between.

5. Manholes shall be bedded on a granular foundation. The granular foundation shall be compacted with vibratory tamps.

3. APPLICATION

A. Permits and Codes – The intent of this section of the specifications is that the contractor's bid on the work covered herein shall be based upon the drawings and specifications but that the work shall comply with all applicable codes and regulations as amended by any waivers. Contractor shall furnish all bonds necessary to get permits for cuts and connections to existing sewers. The Contractor shall be responsible for obtaining or verifying all permits for all or portions of this project prior to starting construction. The Contractor shall notify the local or county inspector or utility superintendent 48 hours prior to commencement of sanitary construction.

B. Local Standards – The term "local standards" as used herein means the standards of design and construction of the respective municipal department or utility company.

C. Existing Improvements – Maintain in operating condition all active utilities, sewers and other drains encountered in the sewer installation. Repair to the satisfaction of the owner any damage to existing active improvements.

D. Workmanship – To conform to all local, state and national codes and to be approved by all local and state agencies having jurisdiction.

E. Trenching – Lay all pipe in open trenches, except when the local authority gives written permission for tunneling or jacking of pipe. Open the trench sufficiently ahead of pipe–laying to reveal any obstructions. The width of the trench shall be the inside pipe diameter plus 24 inches for 12 inches above the pipe. Sheet and brace the trench as necessary to protect workmen and adjacent structures. All trenching to comply with Occupational Safety and Health Administration Standards. Open trenches shall be properly protected and/or barricaded when left unattended. Keep trenches free from water while construction is in progress. Under no circumstances shall pipe or appurtenances be laid in standing water. Conduct the discharge from trench dewatering to drains or natural drainage channels.

F. Special Supports – Whenever, in the opinion of the Engineer, the soil at or below the pipe grade is unsuitable for supporting sewers and appurtenances specified in this section, such special support, in addition to those shown or specified, shall be provided as the Engineer may direct, and the contract will be adjusted.

G. Backfilling – for a depth of at least 12 inches above the top of the pipe, backfill with 12" of #8 crushed stone or #8 treated fine aggregate. Compact this backfill thoroughly, taking care not to disturb the pipe. For the remaining trench depth, backfill with earth or granular material containing stones or rocks not larger than 4 inches. Backfill under and within 5' of walks, parking areas, driveways and streets shall be granular material only – thoroughly compacted, by approved methods.

H. Flow Channels – The flow channels within manholes shall be an integral part of the precast base. The channels shall be shaped and formed for a clean transition with proper hydraulics to allow the smooth conveyance of flow through the manhole. The bench wall shall be formed to the crown of the inlet and outlet pipes to form a "U" shaped channel. The bench wall shall slope back from the crown at 1/2 inch per foot to the manhole wall. No brick, rock or sand fillers will be allowed.

I. Infiltration – The contractor shall furnish necessary equipment to test sewers for infiltration. Infiltration rates shall not exceed the Local Standards. All sanitary sewer lines upon completion will be required to pass a low pressure air test, unless otherwise directed by the City Engineer. Said test shall be conducted according to NCPI Standard Method, and shall be witnessed by an inspector authorized by the City Engineer. Infiltration under test shall not exceed 100 gallons per inch of inside diameter of sewer pipe per mile of sewer in 24 hours and is inclusive of all appurtenances within the section being tested such as manholes, house connections, etc. Any portions not passing said tests for acceptance shall be repaired or replaced, including re–excavation and backfill, at the Contractor's expense.

J. Flushing Sewers – Flush all sanitary sewers except building sewers with water to obtain free flow through each line. Remove all silt and trash from appurtenances just prior to acceptance of work.

K. Plastic Sewer Pipe Installation – Plastic sewer pipe shall be installed in accordance with ASTM D2321 per latest revision, and no plastic pipe shall exceed an 11 point mandrel test deflection of 5%. All sewer mains shall be lamped at the time the mandrel test is conducted. All mains shall be true to alignment and grade.
327 IAC 3–6–19(a) requires that a deflection test shall be performed on each flexible pipe following the elapse of thirty (30) days after the placement of the final backfill.
327 IAC 3–6–19(c) requires that the diameter of the rigid ball or mandrel used for a deflection test shall be no less than ninety–five percent (95%) of the base inside diameter of the pipe to be tested dependent on what is specified in the corresponding ASTM standard. Also, the test shall not be performed with the aid of a mechanical pulling device.

L. Storm Water Connections – No roof drains, footing drains and/or surface water drains may be connected to the sanitary sewer systems, including temporary connections during construction.

M. Waterline Crossing – Water and sewer line crossings and separations shall be in accordance with Ten States Standards and local and state codes. Waterlines and sanitary sewers shall maintain a minimum of 10 foot horizontal separation and a minimum 18 inches of clearance between pipes at crossings. Otherwise, sanitary sewer within 10 feet of waterlines shall be constructed of water works grade Ductile Iron Pipe with mechanical joints and fittings. One length of sewer pipe should be centered at the waterline crossing so that no joint is closer than 10 feet to the waterline.

N. Utilities – It shall be the responsibility of each contractor to verify all existing utilities and conditions pertaining to his phase of the work. It shall also be the contractors responsibility to contact the owners of the various utilities before work is started. The contractor shall notify in writing the owners and the engineer of any changes, errors or omissions found on these plans or in the field before work is started or resumed.

O. Service Laterals – Individual building service lines shall be 6 inches in diameter and of material equal to that specified in 2A of this section. Service lines shall be connected to the main sewer by a wye at locations generally shown within these plans. Service lines shall be extended to a distance of 5 feet beyond the right–of–way line and within 5'–8' of the existing ground surface. The ends shall be plugged and sealed with a water tight cap. Sewer service lines shall be marked with a 2"x4" painted green and extending from the lateral end to 3' above grade.

P. New Sanitary Sewer Main Construction – Contractor shall record length and dimensions of each service line stub from nearest downstream manhole measure along the sanitary sewer main. The locations of manholes and service lines along with any other construction changes are to be incorporated on the original construction drawings as "as–built" locations and submitted to the Engineer as soon after completion of construction as possible, not to exceed 30 days.

Q. Field Testing – All manholes must be vacuum tested after installation, repair or modification in accordance with ASTM C1244–93, Standard Test Method for Concrete Sewer Manholes by Negative Air Pressure (Vacuum) Test.

TOWN OF MCCORDSVILLE STANDARDS

CONTRACTOR TO CONSTRUCT ALL APPLICABLE SITE IMPROVEMENTS TO THE TOWN OF MCCORDSVILLE, INDIANA STORM WATER TECHNICAL STANDARDS MANUAL INCORPORATED BY REFERENCE AND CURRENT INDOT STANDARDS/SPECIFICATIONS.

STORM SEWER SYSTEMS

1. SCOPE OF WORK

The work under this section includes all storm sewers, storm water inlets, and related items, including excavating and backfilling, necessary to complete the work shown on the drawings. All work and materials shall meet local specifications.

2. MATERIALS

A. Storm Sewers

1. Reinforced concrete sewer pipe shall conform to ASTM C–76 latest revision, with joints conforming to ASTM C–443 latest revision when storm pipe is located within public right–of–way.

2. Aluminized type 2 corrugated steel pipe shall be manufactured in accordance with AASHTO M36 (type I with 2 2/3" x 1/2" corrugations for 12" and 15" diameters; type IR with 3/4" x 3/4" x 7 1/2" corrugations for 18" diameter and larger). The pipe shall be formed from an aluminized steel type 2 coil that conforms to AASHTO M274. The minimum gage thickness of the pipe shall be as follows:

Diameter	Gage
12" – 36"	16
42" – 48"	14
54" – 84"	12

3. High density polyethylene pipe shall perform to AASHTO M252 and M294 Type S specifications, latest revision, and shall have material specifications conforming to ASTM D1248 or D3350, latest revision.

B. Manholes

1. Precast reinforced concrete manhole sections and steps shall conform to ASTM C–478 latest revision.

2. Casting shall be of uniform quality, free from blow holes, porosity, hard spots, shrinkage distortion or other defects. They shall be smooth and well cleaned by shot –blasting or by some other approved method. They shall be coated with asphalt paint which shall result in a smooth coating, tough and tenacious when cold, not tacky or brittle. They shall be gray iron meeting ASTM A–48 latest revision.

3. Joints – Manhole sections shall be jointed with rubber type gaskets. The rubber type gaskets shall meet ASTM C–443 latest revision. When manhole and storm pipe are continuously in water.

4. Shop Drawings – Contractor to submit storm sewer structure precast drawings to engineer for approval prior to installation.

C. SUBDRAINS

1. Perforated plastic pipe subdrains shall conform to ASTM F–405, AASHTO M–252 (4" to 10" pipe).

3. APPLICATION

A. Permits and Codes – The intent of this section of the specifications is that the contractor's bid on the work covered herein shall be based upon the drawings and specifications but that the work shall comply with all applicable codes and regulations as amended by any waivers. Contractor shall furnish all bonds necessary to get permits for cuts and connections to existing sewers. Contractor shall notify the local governing jurisdiction a minimum of 72 hours prior to the commencement of storm sewer construction.

B. Local Standards – the term "Local Standards" as used herein means the standards of design and construction of the respective municipal department or utility company.

C. Existing Improvements – Maintain in operating condition all active utilities, sewers and other drains encountered in the sewer installation. Repair to the satisfaction of the owner any damage to existing active improvements.

D. Workmanship – To conform to all local, state and national codes and to be approved by all local and state agencies having jurisdiction.

E. Trenching – Lay all pipe in open trenches, except when the local authority gives written permission for tunneling. Open the trench sufficient ahead of pipe laying to reveal any obstructions. The width of the trench shall be the inside pipe diameter plus 24 inches for 12 inches above the pipe. Sheet and brace trench as necessary to protect workmen and adjacent structures. All trenching to comply with Occupational Safety and Health Administration Standards. Keep trenches free from water while construction is in progress. Under no circumstances lay pipe or appurtenances in standing water. Conduct the discharge from trench dewatering to drains or natural drainage channels.

F. Special Supports – Whenever in the opinion of the Engineer the soil at or below the pipe grade is unsuitable for supporting sewers and appurtenances specified in this section, such special support, in addition to those shown or specified, shall be provided as the Engineer may direct, and the contract will be adjusted.

G. Backfilling – for a depth of at least 12 inches above the top of the pipe, backfill with earth or granular material free from large stones, rock fragments, roots or sod. Tamp this backfill thoroughly, taking care not to disturb the pipe. For the remaining trench depth, backfill with earth or granular material containing stones or rocks not larger than 4 inches. Backfill under and within 5' of paved areas shall be granular material only and shall conform to local standards – thoroughly compacted by approved methods.

H. Manhole Inverts – Construct manhole flow channels of concrete sewer pipe or brick, smoothly finished and of semicircular section conforming to the inside diameter of the connecting sewers. Make changes in size or grade gradually and changes in direction by true curves. Provide such channels for all connecting sewers at each manhole.

I. Subdrains – All subdrains shall be of the size shown on the plans and shall be constructed to the grades shown. All drains constructed off–site as part of the outlet drain will be located as shown.

J. Utilities – It shall be the responsibility of each contractor to verify all existing utilities and conditions pertaining to his phase of the work. It shall also be the contractors responsibility to contact the owners of the various utilities before work is started. The contractor shall notify in writing the owners or the engineer of any changes, errors or omissions found on these plans or in the field before work is started or resumed.

STREETS AND PAVING

1. SCOPE OF WORK

A. The work required under this section includes all concrete and bituminous paving and related items necessary to complete the work indicated on drawings and described in the specifications, including but not limited to:

All streets, parking areas in contract limits
Curbs and gutters.
Sidewalks and concrete slabs, exterior steps.

2. MATERIALS

A. Concrete – Concrete shall be ready–mixed concrete and shall be a mix of proportioned fine and coarse aggregates with Portland cement and water. Minimum cement content shall be 6 bags per cubic yard of concrete and maximum water content shall be 5.5 U.S. gallons per sack of cement, including moisture in the aggregate. Slump for normal weight concrete shall be a maximum of 4 inches and a minimum of 2 inches. The slump of machine place concrete shall be no less than 1–1/4 inches nor more than 3 inches. Standard test ASTM C–143 shall be used to measure slump. Compressive strength of concrete at 28 days shall be 4000 psi. All exterior concrete shall have air entrainment of 5% to 8% by volume per ASTM C–260. Retempering delivered concrete will not be allowed. Concrete shall be composed of:

1. Portland cement – Conforming to ASTM C–150, Type IA or Type IIIA.

2. Aggregates: Conforming to ASTM C–33

3. Water – Shall be clear and free from injurious amounts of oils, acids, alkalis, organic materials or other deleterious substances.

B. Welded Steel Wire Fabric – Where required for concrete reinforcement shall conform to ASTM A185.

C. Premoulded Joint Filler – Shall be of non –extruding type meeting ASTM D–544 except that premoulded joint filler used in concrete walk construction may be either non–extruding or resilient.

D. Bituminous Pavement Materials – All materials proposed for the construction of bituminous pavements shall comply with the Indiana Department of Transportation specifications, per latest revision.

E. Compacted Aggregate Subbase: Shall be crushed stone or gravel. Crushed gravel shall be a minimum of 35% crushed material. Chert shall be limited to a maximum of 8% of the total. Material shall be free from an excess of flat, elongated, thinly laminated, soft or disintegrated pieces; and shall be free from fragments coated with dirt. Compacted aggregate shall be graded as follows:

SIEVE SIZE	% PASSING
1–1/2"	100
1"	80–100
3/4"	70–90
1/2"	55–80
#4	35–60
#8	25–50
#30	12–30
#200	5–10

3. APPLICATION

A. Grading – Do any necessary grading in addition to that performed in accordance with Earthwork Section, to bring subgrades, after final compaction, to the required grades and sections for site improvement.

B. Preparation of Subgrade – Remove spongy and otherwise unsuitable material and replace with stable material. No traffic will be allowed on prepared subgrade prior to paving.

C. Compaction of Subgrade – The first 12 inches below the subgrade shall be compacted to at least 100% of the maximum dry density as determined by the provisions of AASHTO T–99. Water shall be prevented from standing on the compacted subgrade. A qualified geotechnical engineer shall be retained by contractor to observe and document a subgrade proof roll (Tri–Axle Truck loaded with aggregate). Contractor shall mediate all areas that fail proof roll and re–test as needed until passed by geotechnical engineer.

D. Compacted Aggregate Subbase – the thickness shown on the drawings is the minimum thickness of the fully compacted subbase. Compaction shall be accomplished by rolling with a smooth wheeled roller weighing 8 to 10 tons. Compact to 95% standard proctor density (ASTM D698) Along curbs, headers and walls and at all placed not accessible to the roller, the aggregate material shall be tamped with mechanical tampers or with approved hand tampers.

E. Bituminous Pavement – Hot asphalt concrete pavement shall be as specified in Section 400–410 of the Indiana Department of Transportation Specifications latest revisions. Paving will not be permitted during unfavorable weather or when the temperature is not in compliance with section 401.05 of the INDOT Specifications.

F. Utility Structures – Check for correct elevation of all manhole covers, valve boxes and similar structures located within areas to be paved, and make, or have made, any necessary adjustments in such structures.

G. Placing Concrete

1. Subgrade – Place concrete only on a moist, compacted subgrade or base free from loose material. Place no concrete on a muddy or frozen subgrade.

2. Forms – All forms shall be free from warp, tight enough to prevent leakage and substantial enough to maintain their shape and position without springing or settling, when concrete is placed. Forms shall be clean and smooth and coated with form release before placement of concrete.

3. Placing Concrete – Concrete shall be deposited so as to require as little rehandling as practicable. When concrete is to be placed at an atmospheric temperature of 35 degrees F. or less, paragraph 702.10 of the Indiana Department of Transportation Specifications latest revision shall be followed.

H. Concrete Curb

1. Expansion Joints – Shall be 1/2 inch thick premoulded at ends of all returns and at a maximum spacing of 100 feet.

2. Contraction Joints – Unless otherwise provided, contraction joints shall be sawed joints spaced 20 feet on center.

3. Finish – Tamp and screed concrete as soon as placed, and fill any honey combed places. Finish square corners to 1/4" radius and other corners to radii shown.

I. Concrete Walks and Exterior Steps

1. Slopes – Provide 1/4 inch per foot cross slope. Make adjustments in slopes at walk intersections as necessary to provide proper drainage.

2. Dimensions – Walks and steps shall be one course construction and of widths and details shown on the drawings.

3. Finish – Screed concrete and trowel with a steel trowel to a hard dense surface after surface water has disappeared. Apply medium broom finish and scribe control joints at 5 foot spacing. Provide 1/2" expansion joints where sidewalks intersect, and at a maximum spacing of 40 feet between expansion joints.

J. Curing Concrete – Except as otherwise specified, cure all concrete by one of the methods described in Section 501.17 of the Indiana Department of Transportation Specifications, latest revision.

K. Finish Pavement Grade – The tolerance for paved areas shall not exceed 1/2–inch ± from finished grade as shown on the design plan. Under no circumstances will "bird baths" holding 1/4–inch of stormwater be accepted by the engineer/owner and contractor will be required to repair/replace/repave the area at no additional cost to owner.

UTILITIES

1. WATER

A. All water mains shall be installed and tested in accordance with local standards and requirements. Refer to Citizens Energy Group Water Standards Manual (January 2025)

2. GAS

Gas mains shown in the plans are for information only. The local gas utility is responsible for final design and installation of new gas mains.

3. OTHER UTILITIES

Electric, Telephone, and CATV lines shown in the plans are for information only. The local utility companies are responsible for final design and installation of their respective utility lines.

4. IDENTIFICATION / LOCATION

Furnish and install "Identification Tape" and "Location Wire" over the centerline of buried utilities.

A. Identification Tape

1. Inert Polyethylene with minimum thickness of 4–mils and shall have a 1–mil thick metallic foil core. Tape width shall be a minimum of 3–inches and a maximum of 6–inches. Imprinted text shall be "Caution Caution – Utility Buried Below" and should repeat itself once every 2 feet, for the entire pipe length. Install approximately 2 feet below final grade over centerline of pipe.

2. "Terra Tape" as manufactured by Reef Industries, Inc., Houston, TX, or approved equal.

B. Location Wire

1. Location wire shall be a 10 gauge insulated, solid copper wire.

The wire shall be contiguous with no fabricated, or field constructed connections interrupting the wires continuity from end to end of pipe.

2. Location wire shall be taped onto the top of the buried pipe.

PER INDOT SPECIFICATION SECTION 215–"CHEMICAL MODIFICATION OF SOILS":

215.01 – DESCRIPTION
THIS WORK SHALL CONSIST OF THE MODIFICATION OF SOILS BY UNIFORMLY MIXING DRY PORTLAND CEMENT, FLY ASH, LIME, OR A COMBINATION OF THE MATERIALS WITH SOIL TO AID IN ACHIEVING THE WORKABILITY OF SOILS HAVING AN EXCESSIVE MOISTURE CONTENT.
215.02 – MATERIALS
215.03 – TESTING AND MIX DESIGN
215.04 – STORAGE AND HANDLING
215.05 – WEATHER LIMITATIONS
215.06 – PREPARATION OF SOILS
215.07 – SPREADING OF CHEMICAL MODIFIERS
215.08 – MIXING
215.09 – COMPACTION
215.10 – MEASUREMENT
215.11 – BASIS OF PAYMENT

SECTION 913 –"SOIL TREATMENT MATERIALS":
913.01 – WATER
913.02 – CALCIUM CHLORIDE
913.03 – SODIUM CHLORIDE
913.04 – LIME

COMPACTION / GEOTECH NOTE

DEPENDING ON SEASONAL PRECIPITATION AND THE MOISTURE CONTENT OF THE SOILS ON SITE, CHEMICAL MODIFICATIONS (LIME STABILIZATION) OR ALTERNATIVE METHODS MAY BE REQUIRED TO ACHIEVE THE NECESSARY COMPACTION SPECIFICATIONS.

AS OF THE DATE OF THESE PLAN DOCUMENTS, A "SUBSURFACE INVESTIGATION & GEOTECHNICAL RECOMMENDATIONS REPORT" HAS NOT BEEN PREPARED OR PROVIDED TO CIVIL SITE GROUP, INC.

EXTERIOR STEPS/HANDRAILS PER ADAAG 4.9
4.9.2 Treads and Risers. On any given flight of stairs, all steps shall have uniform riser heights and uniform tread widths. Stair treads shall be no less than 11 in (280 mm) wide, measured from riser to riser. Open risers are not permitted.
4.9.3 Nosings. The undersides of nosings shall not be abrupt. The radius of curvature at the leading edge of the tread shall be no greater than 1/2 in (13 mm). Risers shall be sloped or the underside of the nosing shall have an angle not less than 60 degrees from the horizontal. Nosings shall project no more than 1–1/2 in (38 mm).
4.9.4 Handrails. Stairways shall have handrails at both sides of all stairs. Handrails shall comply with 4.26 and shall have the following features:
(1) Handrails shall be continuous along both sides of stairs. The inside handrail on switchback or dogleg stairs shall always be continuous.
(2) If handrails are not continuous, they shall extend at least 12 in (305 mm) beyond the top riser and at least 12 in (305 mm) plus the width of one tread beyond the bottom riser. At the top, the extension shall be parallel with the floor or ground surface. At the bottom, the handrail shall continue to slope for a distance of the width of one tread from the bottom riser; the remainder of the extension shall be horizontal. Handrail extensions shall comply with 4.4.
(3) The clear space between handrails and wall shall be 1–1/2 in (38 mm).
(4) Gripping surfaces shall be uninterrupted by newel posts, other construction elements, or obstructions.
(5) Top of handrail gripping surface shall be mounted between 34 in and 38 in (865 mm and 965 mm) above stair nosings.
(6) Ends of handrails shall be either rounded or returned smoothly to floor, wall or post.
(7) Handrails shall not rotate within their fittings.

REVISION RECORD

REV	DATE	DESCRIPTION	DES BY	APP BY

BDC REALTY GROUP, LLC
6274 S FOX CHASE
PENDLETON, IN 46064

CIVIL SITE GROUP, INC.
CivilSite GROUP, INC.
718 Adams Street, Suite E
Carmel, Indiana 46032
Ph: (317) 810–1677

BRIAN S CROSS
REGISTERED
PE 19900647
PROFESSIONAL ENGINEER
PRELIMINARY
NOT FOR CONSTRUCTION

DATE: 06/06/2025

DWN BY:	BSC
CHKD. BY:	BSC
SCALE:	N/A
DATE:	06/06/25

SHOPPES at BROOKSIDE - BLOCK A
CR 600 W
McCORDSVILLE, IN 46055

SPECIFICATIONS
PHASE II - SOUTH BUILDING

PROJECT NUMBER
BRG.007

DRAWING NUMBER
C9.0
SHEET 12 OF 24

PLANTING SCHEDULE

SYMBOL	Quantity	Common Name	Scientific Name
	6	Japanese Zelkova (Min. 2.5" Caliper 6" Above Root Ball)	ZELCOVA SERRATA
	26	CRESENDO MAPLE (Min. 2.5" Caliper 6" Above Root Ball)	ACER SACCHRAUM 'MORTON'
	23	THORNLESS HONEY LOCUST (Min. 2.5" Caliper 6" Above Root Ball)	GLENDITSIA TRIACANTHOS
	5	COLUMNAR EUROPEAN HORNBEAM (Min. 2.5" Caliper 6" Above Root Ball; B&B)	CARPINUS BETULUS FASTIGIATA
	69	DENSIFORMIS YEW – MIN. 18" HIGH, 4' O.C.	TAXUS X MEDIA 'DENSIFORMIS'
	9	SPIREA 'CRISP LEAF' – (Min. 18" High, 4' O.C.)	SPIRAEA X BUMALDA 'CRISPA'
	18	"GREEN VELVET BOXWOOD" (Min. 18" Height)	BUXUS x 'Green Velvet'
	14	"DWARF FOUNTAIN GRASS" – 4' O.C.	
	12	RED KNOCKOUT ROSE SHRUB – #3 CONT., 4' O.C.	ROSA – RADRAZZ
	14	Tiny Tuff Stuff (Hydrangea serrata "MAKD" USPP 24,842)	
	24	"SEA GREEN" JUNIPER 18" HIGH, 4' O.C. – TYP.	JUNIPERUS CHINENSIS
	32	Assorted "Happy Returns Daylily' and Hemerocallis 'Tennesse Volunteer' Daylily	

SPECIES NOTE

THE SPECIES OF THE TREES AND SHRUBS SHOWN ON THIS LANDSCAPE PLAN ARE SUBJECT TO CHANGE BASED ON SEASONAL AVAILABILITY. ALL SUBSTITUTIONS WILL BE OF SPECIES APPROVED BY THE TOWN OF PENDLETON.

Indiana 811 Know what's below. Call before you dig.

LEGEND:

- APPROX. PROJECT SITE LIMITS
- 2-INCH DEEP HARDWOOD MULCH BED. COLOR SELECTED BY OWNER.
- BUILDING BASE LANDSCAPE RIVER ROCK BED OVER WEED BARRIER. TO BE SELECTED BY OWNER.

PLAN NOTES:

- (TR) TRASH ENCLOSURE – SEE ARCHITECTURAL PLAN FOR DETAIL
- (PS) PERMANENT SEED/STRAW MULCH DISTURBED AREAS
- (BR) DERO HOOP BIKE RACK HR-FT-EPX BLACK

NORTH

20 0 10 20

(IN FEET)
1 inch = 20 ft.

LANDSCAPE NOTE

ALL LANDSCAPING SHALL BE IN ACCORDANCE WITH THE TOWN OF MCCORDSVILLE ZONING ORDINANCE. THE MINIMUM LANDSCAPING IMPROVEMENTS ARE SUBJECT TO FINAL INSPECTION.

TOWN OF MCCORDSVILLE STANDARDS

CONTRACTOR TO CONSTRUCT ALL APPLICABLE SITE IMPROVEMENTS TO THE TOWN OF McCORDSVILLE CURRENT STANDARDS PER THE ATTACHED STANDARD DETAIL SHEETS.

REVISION RECORD

REV	DATE	DESCRIPTION	DES BY	APP BY
1	07/01/25	REV. PER TAC REVIEW	BSC	BSC

IRRIGATION NOTE

SITE IRRIGATION IS NOT SHOW ON THESE PLANS. IF SITE IRRIGATION IS REQUIRED, CONTRACTOR SHALL WORK WITH THE LOCAL WATER UTILITY TO DETERMINE THE REQUIREMENTS & LOCATION FOR THE IRRIGATION METER & SITE IRRIGATION SYSTEM.

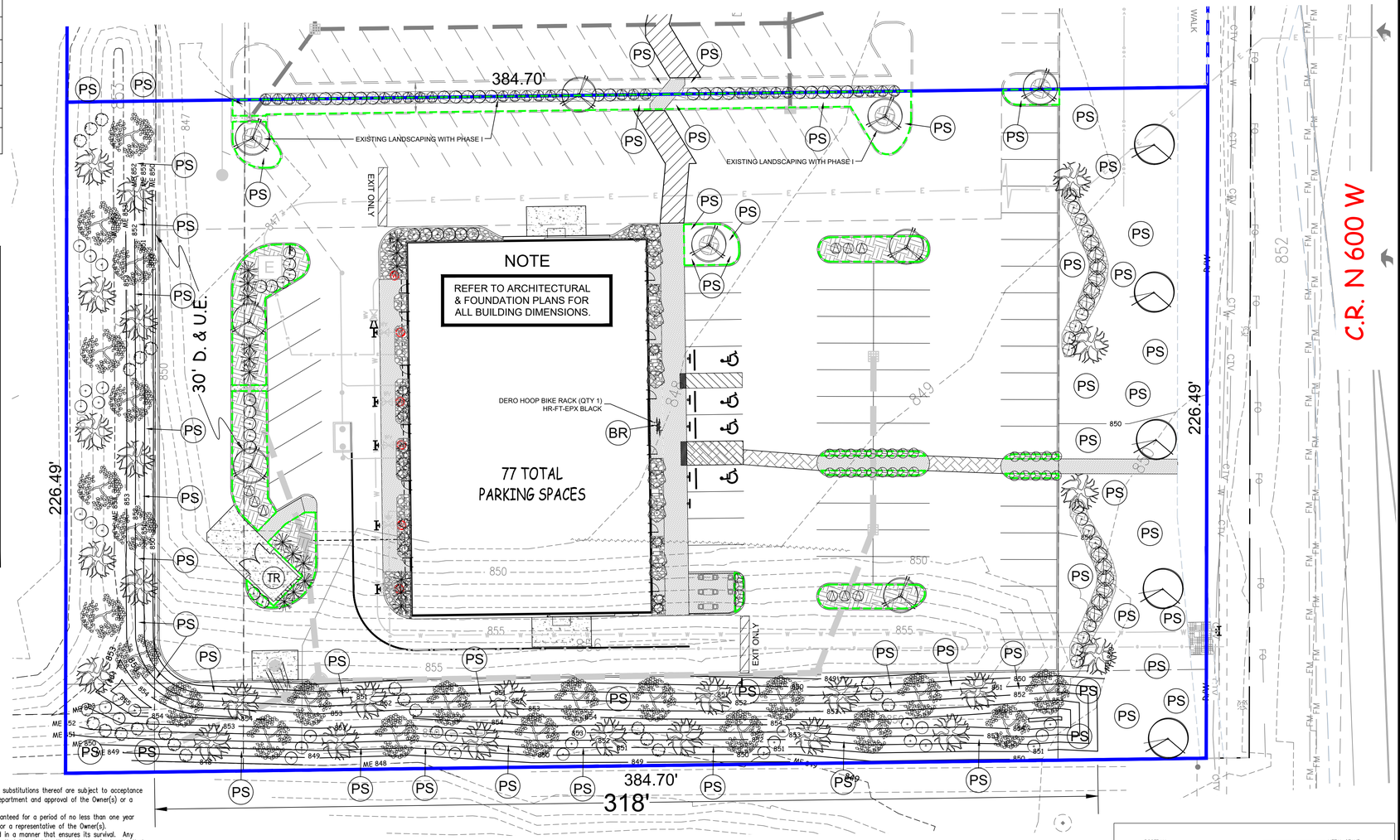

LANDSCAPE CALCULATIONS

PARKING PERIMETER:
EAST LENGTH: 191 FT
TREES REQ'D: 4 (1 TREE PER 50LF)
TREES PROVIDED: 4

PARKING:
INTERIOR PARKING AREA: 41,345 S.F.
LANDSCAPE AREA REQ'D.: 2,068 S.F. (5%)
LANDSCAPE AREA PROVIDED: 3,886 S.F. (9.4%)
TREES REQ'D: 6 (1 TREE PER 2,400 SF PKG AREA)
TREES PROVIDED: 8
SHRUBS REQ'D: 27 (1 SHRUB PER 500 SF PKG AREA)
SHRUBS PROVIDED: 34+

BUFFER YARD (WEST):
BUFFER LENGTH: 227 FT
TREES REQ'D: 16 (7 TREES PER 100LF)
TREES PROVIDED: 18
SHRUBS REQ'D: 23 (10 SHRUBS PER 100LF)
SHRUBS PROVIDED: 26

BUFFER YARD (SOUTH):
BUFFER LENGTH: 318 FT
TREES REQ'D: 23 (7 TREES PER 100LF)
TREES PROVIDED: 27
SHRUBS REQ'D: 32 (10 SHRUBS PER 100LF)
SHRUBS PROVIDED: 32

STREET FRONTAGE (OVERLAY):
LENGTH: 227 FT
TREES REQ'D: 5 (1 TREE PER 50LF)
TREES PROVIDED: 5

EXISTING CONDITIONS NOTE

CONTRACTOR TO VERIFY ALL EXISTING CONDITIONS, INCLUDING UTILITIES AND DRAINAGE INFRASTRUCTURE BEFORE COMMENCING WITH CONSTRUCTION. CONTRACTOR TO NOTIFY ENGINEER OF ANY DISCREPANCIES.

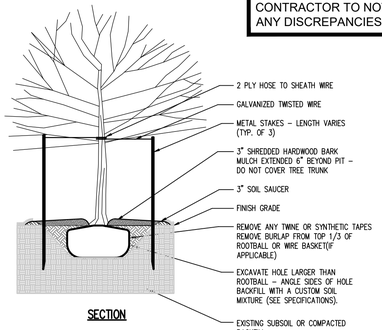

DECIDUOUS TREE DETAIL

SCALE: NOT TO SCALE

LANDSCAPE NOTES:

All species of plant materials and substitutions thereof are subject to acceptance by the Town of McCordsville Planning Department and approval of the Owner(s) or a representative of the Owner(s)..

All plant materials are to be warranteed for a period of no less than one year from final acceptance by the Owner(s) or a representative of the Owner(s).

All plant material is to be planted in a manner that ensures its survival. Any environmental or other type of situation that is noted by the landscape Contractor that could potentially injure the plant or shorten its longevity is to be made known to the Owner(s) and potential substitutions or corrections to the situation can be made at no expense to the Contractor.

All materials failing the one year warrantee period are to be replaced at the expense of the Landscape Contractor.

Any deviation from responsible landscape practices and the Town of McCordsville Ordinances will result in the immediate termination of the Landscape Contract and the Contractor will pay all costs associated with the corrections.

All plant material is to come from respectable sources within 100 miles of the site on which it is being installed. If no source for a plant species or acceptable substitute is available within this area, the project Landscape Architect/Engineer is to be notified immediately to make a determination of possible options.

All plant material is subject to approval by the project Landscape Architect/Engineer prior to installation and may be rejected for reasons of health, aesthetics, size or other reasonable causes.

The Landscape Contractor is responsible for the timely installation of all material in his contract. Should there be a delay due to weather or other unforeseeable, natural circumstances, the timeline will be adjusted.

IRRIGATION CONTRACTOR IS RESPONSIBLE TO SUPPLY WATER METER PIT, SERVICE TAPS AT PUBLIC MAIN, AND ALL APPURTENANCES REQUIRED BY THE WATER SERVICE PROVIDER.

TOPOGRAPHIC & BOUNDARY NOTE

ALL EXISTING HORIZONTAL AND VERTICAL INFORMATION HAS BEEN SHOWN PER A TOPOGRAPHIC SURVEY DATED 03/11/2024 PREPARED BY CROSSROAD ENGINEERG, P.C.; THEREFORE, CIVIL SITE GROUP, INC. CANNOT BE HELD RESPONSIBLE IF ACTUAL HORIZONTAL AND VERTICAL DATA IS DIFFERENT FROM THAT SHOWN ON THESE PLANS. CONTRACTOR IS RESPONSIBLE FOR FIELD VERIFICATION OF ALL EXISTING CONDITIONS PRIOR TO COMMENCING WITH CONSTRUCTION.

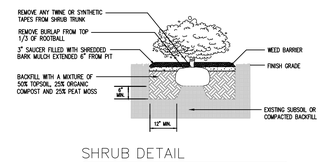

SHRUB DETAIL

SCALE: NOT TO SCALE

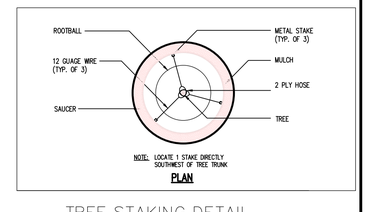

TREE STAKING DETAIL

SCALE: NOT TO SCALE

BDC REALTY GROUP, LLC
6274 S FOX CHASE
PENDLETON, IN 46064

CIVIL SITE GROUP, INC.
718 Adams Street, Suite E
Carmel, Indiana 46032
Ph: (317) 810-1677
CivilSite GROUP, INC.

BRIAN S CROSS REGISTERED No. P-18100647 STATE OF INDIANA PROFESSIONAL ENGINEER

PRELIMINARY NOT FOR CONSTRUCTION

DATE: 06/06/2025

DWN BY:	BSC
CHKD. BY:	BSC
SCALE:	1"=20'
DATE:	06/06/25

SHOPPES at BROOKSIDE - BLOCK A
CR 600 W
McCORDSVILLE, IN 46055

LANDSCAPE PLAN
PHASE II - SOUTH BUILDING

PROJECT NUMBER
BRG.007

DRAWING NUMBER
L1.0
SHEET 13 OF 24

NOTE:
The Town of McCordsville reserves the right to require house-side shields be added to the 4 free-standing site lights along the rear and south drives in the future should the town determine there is a need to further reduce lighting.

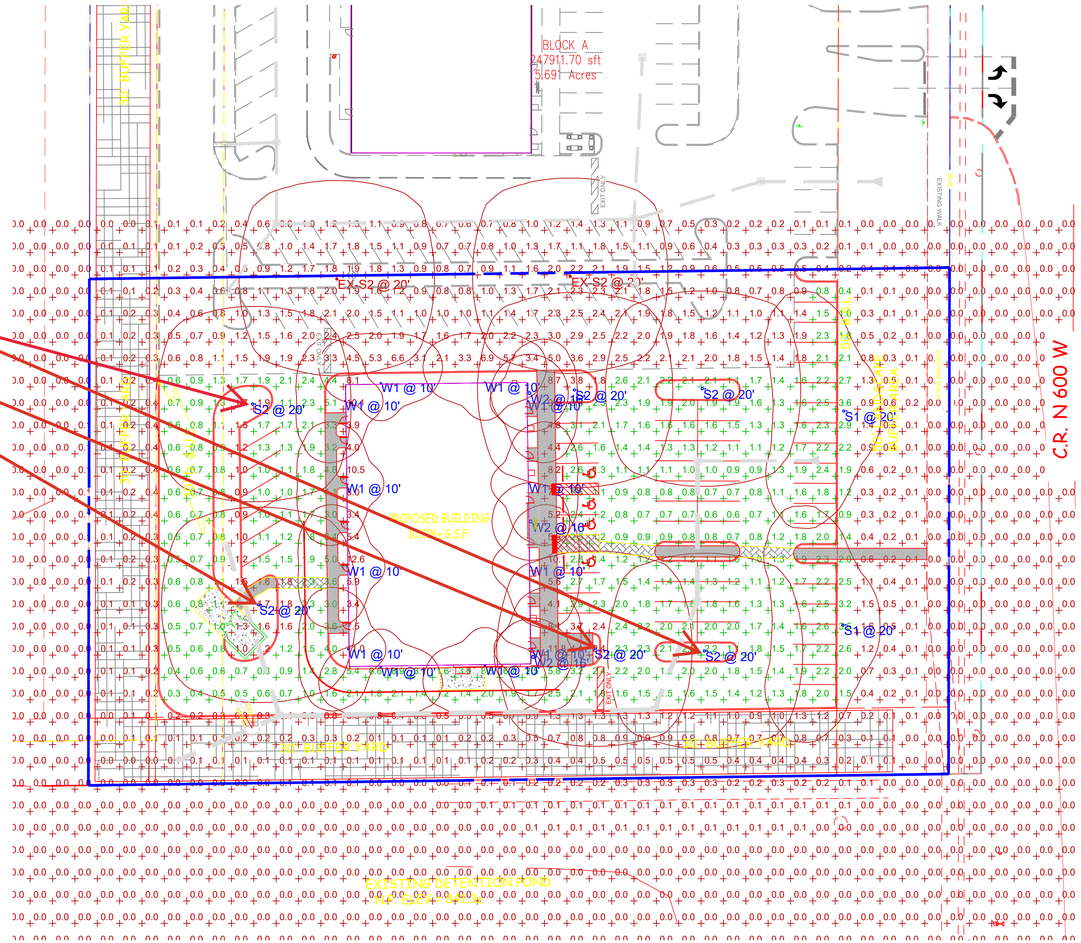

LIGHTING PHOTOMETRIC
SCALE : $\frac{1}{32}$" = 1FT

NOTE: All free-standing lighting shall be no more than 25’ from grade.

Statistics

Description	Symbol	Avg	Max	Min	Max/Min	Avg/Min
Paved Areas_Grade		1.7 fc	8.9 fc	0.3 fc	29.7:1	5.7:1
Site_Grade		0.8 fc	12.6 fc	0.0 fc	N/A	N/A

Schedule

Symbol	Label	Quantity	Manufacturer	Catalog Number	Description	Lumens Per Lamp	Light Loss Factor	Wattage
	S1	2	Visionaire Lighting LLC	ODN1-T3-10L-3K-UNV-CLS MOUNTED AT 20'0"	ODEN 1 ARRAY 10000 LUMENS T3 CUTOFF	7601	0.95	65.52
	S2	6	Visionaire Lighting LLC	ODN1-TSLS-10L-3K-UNV MOUNTED AT 20'0"	ODEN 1 ARRAY 10000 LUMENS TSLS CUTOFF LOUVER SHIELD 65W	9721	0.95	65.52
	W1	12	EELP, Inc.	WP53-E-40L-QT-40K-T3	Formed black metal housing	4614	0.95	40.9964
	W2	3	America Nail Plate	WS16M016LDNW40K	WS16.16" WAREHOUSE SHADE, 16W CREE LED Module - Dot+ Lens, 4000K CCT	1852	0.95	17.45
	EX-S2	2	EXISTING	EXISTING	EXISTING	9721	0.95	65.52

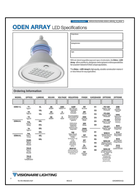

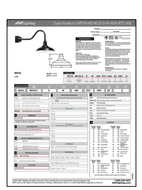

GENERAL NOTES

GENERAL PLAN NOTES:

- MH: AS NOTED'
- POINTS CALCULATED AT: GRADE
- LIGHT LOSS FACTOR: AS NOTED
- CONTACT ERIC FROEDGE FOR PRICING/QUOTATION INFORMATION

No.	Revision/Issue	Date

Firm Name and Address

LIGHT|source THE LIGHTING & CONTROLS EXPERTS

8719 CASTLE PARK DRIVE
INDIANAPOLIS, IN 46256
WWW.LIGHTSOURCEINDIANA.COM
p:317-598-6900

Project Name and Address

VILLAGES AT BROOKSIDE - PHASE II

EXTERIOR LIGHTING PHOTOMETRIC

Drawn By: ARH

Scale: As Noted

Date: 6/23/2025

Drawing #: **LS-25-2210 SITE**

Sheet No.: **E101**

Disclaimer:
This lighting submittal is strictly based on the information provided to LIGHTsource, and is provided without warranty as to accuracy. Information provided by others (including but not limited to building but not limited to floor-plans, reflected ceiling plans, electrical plans and specifications) provided to Acuity Brands is incomplete or not current (i.e., newer versions exist), the accuracy of proposed design may be adversely affected. Once this lighting submittal is received by the customer or end-user (as applicable),it is the obligation of the customer or end-user (as applicable) to consult with a professional engineering advisor to determine whether the proposed design meets applicable requirements including but not limited to building and electrical code compliance, safety, suitability and effectiveness for use in a particular application. In no event will LIGHTsource be responsible for any loss resulting from any use of any information contained in this lighting submittal.

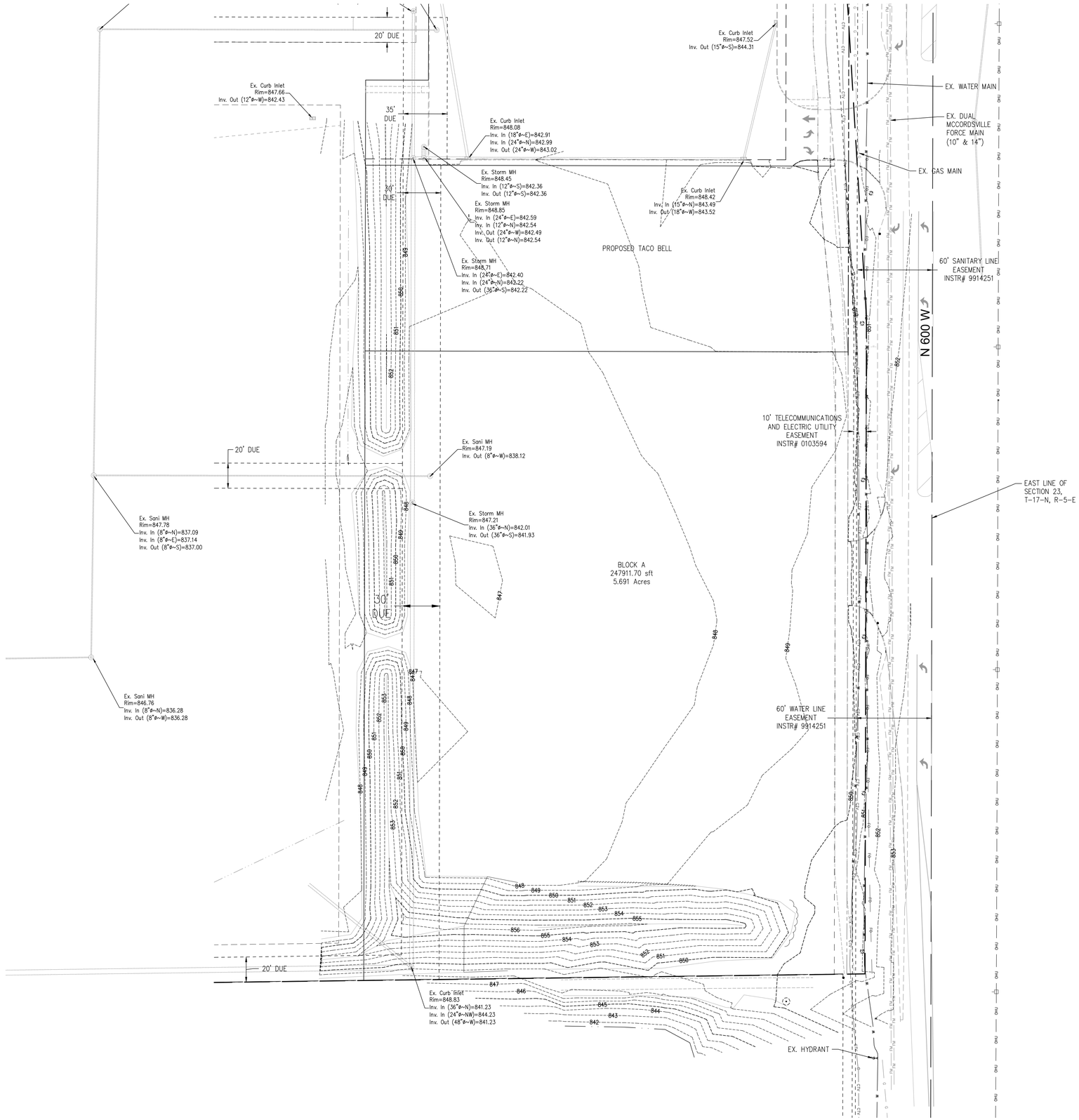

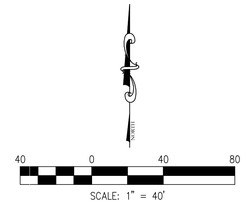

TOPOGRAPHICAL NOTES

1. THIS IS NOT A BOUNDARY SURVEY.
2. UTILITIES ARE GRAPHICAL REPRESENTATION PER SURVEY AND MAPPING.
3. EXISTING INFORMATION ON LOT 1, BLOCK A REFLECTS DESIGN INFORMATION PER PLANS DATED FEBRUARY 19, 2021 WITH A LATEST REVISION DATE OF MAY 14, 2021. ACTUAL IN PLACE ELEVATIONS WILL NEED TO BE CONFIRMED BY CONTRACTOR.

EXISTING UTILITY SIZE AND MATERIAL INFORMATION SHOWN ON THESE PLANS ARE PER THE BEST GRAPHICAL AND VISIBLE INFORMATION AVAILABLE. CONFLICTS MAY EXIST AND IT SHALL BE THE CONTRACTOR'S RESPONSIBILITY TO FIELD VERIFY ALL SIZING AND MATERIAL INFORMATION PROVIDED. IF ACTUAL CONDITIONS DIFFER FROM THAT INFORMATION SHOWN ON THE PLANS, THE CONTRACTOR SHALL, PRIOR TO THE INSTALLATION OF ANY PROPOSED INFRASTRUCTURE, NOTIFY THE DESIGN ENGINEER IMMEDIATELY.

INDIANA Dig no dig state Know what's below. Call before 811

CROSSROAD ENGINEERS, PC
Transportation & Development Consultants
115 N. 17th AVENUE, BEECH GROVE, IN 46107 (317) 780-1555

SHEET ----

TOPOGRAPHICAL SURVEY

BLOCK A

JOB No.	.	DRAWN	KLF	CHECKED	CWC
DATE	MARCH 11, 2024	DESIGNED		APPR.	CWC

GEORGE W. CHARLES II REGISTERED No. LS 20800117 STATE OF INDIANA LAND SURVEYOR

NO.	DATE	REVISIONS	BY	APPR.
1				
2				
3				
4				
5				
6				
7				
8				
9				

SHEET ----

DIRECTORY PATH : R:\Active\BDC Bath\Villages At Brookside - Block A\Design\CAD\Deliverables
FILENAME: Block A 03.09.24.dwg
DATE/USER: 3/11/2024 4:20 PM / kfagg